# SERVICE MANUAL

# 18H

## Fixed Frame
## Pivot Arm
## Paper Roll Clamps

Manual Number 6805681

cascade® corporation

# CONTENTS

## 1.1 Introduction

This manual provides the Installation, Periodic Maintenance, Troubleshooting, Service and Specifications for Cascade 18H Fixed Frame Paper Roll Clamps.

These attachments are designed for three-shift-a-day continuous duty operations with minimal maintenance. They provide exceptional visibility for the lift truck driver and offer optimized roll handling.

In any communication about the attachment, refer to the product catalog and serial numbers stamped on the nameplate as shown. If the nameplate is missing, the numbers can be found stamped on the front of the faceplate top or side

**IMPORTANT:** Supply input fittings are JIC.

**NOTE:** Specifications are shown in both inch and (Metric) units. All fasteners have a torque value range of ±10% of stated value.

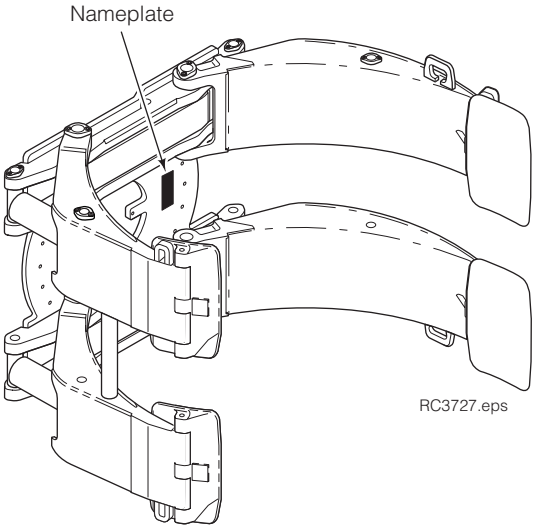


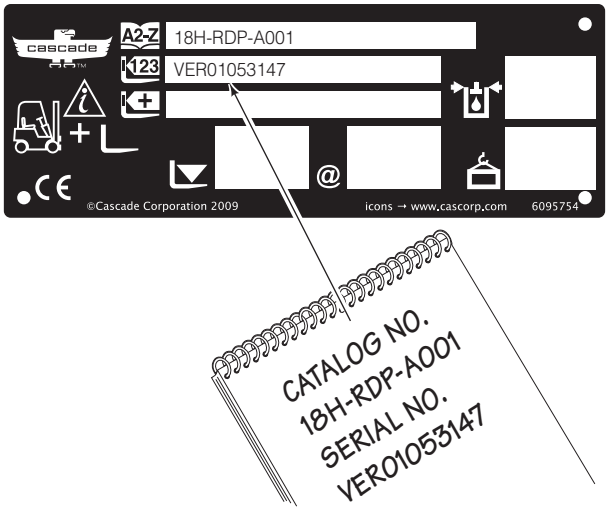


## 1.2 Special Definitions

The statements shown appear throughout this Manual where special emphasis is required. Read all WARNINGS and CAUTIONS before proceeding with any work. Statements labeled IMPORTANT and NOTE are provided as additional information of special significance or to make your job easier.

> **WARNING** - A statement preceded by WARNING is information that should be acted upon to prevent **bodily injury.** A **WARNING** is always inside a ruled box.

**CAUTION -** A statement preceded by CAUTION is information that should be acted upon to prevent machine damage.

**IMPORTANT -** A statement preceded by IMPORTANT is information that possesses special significance.

**NOTE -** A statement preceded by NOTE is information that is handy to know and may make your job easier.

## 2.1 Truck System Requirements

**WARNING:** Rated capacity of the truck/attachment combination is a responsibility of the original truck manufacturer and may be less than that shown on the attachment nameplate. Consult the truck nameplate.

To achieve maximum operating capacity of the 18H Paper Roll Clamp, the following requirements must be met.

### Truck Relief Setting

2300 psi (160 bar) Maximum

### Truck Flow Volume ①

| | Min. ② | Recommended | Max. ③ |
|---|---|---|---|
| **18H** | 5 GPM (18 L/min.) | 7.5 GPM (28 L/min.) | 10 GPM (37 L/min.) |

① Cascade 18H Roll Clamps are compatible with SAE 10W petroleum base hydraulic fluid meeting Mil. Spec. MIL-0-5606 or MIL-0-2104B. Use of synthetic or aqueous base hydraulic fluid is not recommended. If fire resistant hydraulic fluid is required, special seals must be used. Contact Cascade.

② Flow less than recommended will result in a rotate speed less than 3 RPM.

③ Flow greater than maximum can result in excessive heating, reduced system performance and short hydraulic system life.

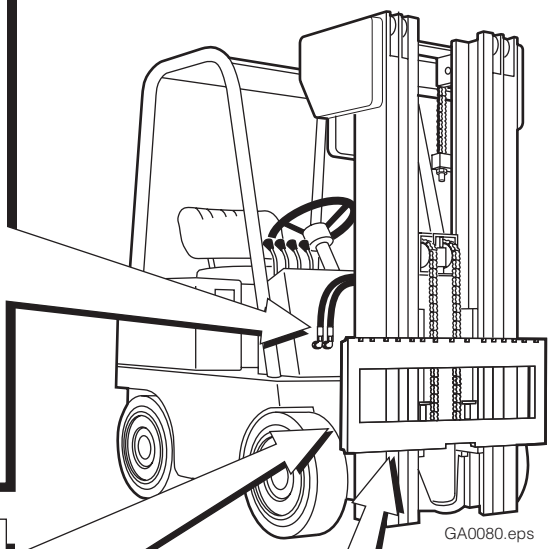



### Carriage Mount Dimension (A) ITA (ISO)

| | Minimum | Maximum |
|---|---|---|
| **Class II** | 14.94 in. (380.0 mm) | 15.00 in. (381.0 mm) |

### Carriage

Clean and inspect carriage bars for damage and smoothness. Repair any protruding welds or damaged notches.

### Auxiliary Valve Functions

Check for compliance with ANSI (ISO) standards:

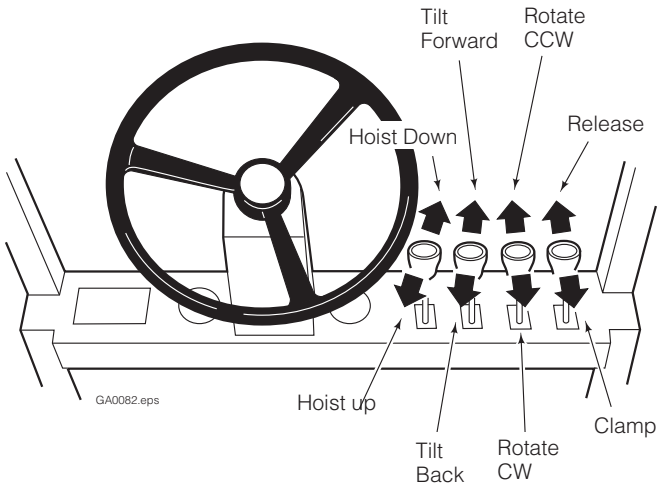

# 2.2 Installation

## 2.2-1 Recommended Hydraulic Supply

18H Fixed Frame Paper Roll Clamps provide the best performance with the hydraulic supply arrangement shown below. Refer to Cascade **Hose and Cable Reel Selection Guide**, Part No. 212119, to select the correct hose reel for the mast and truck. The hose and fitting requirements are:

- All hoses and fittings for both CLAMP and ROTATE functions requirements No. 6 hose with 9/32 in. (7 mm) minimum I.D.

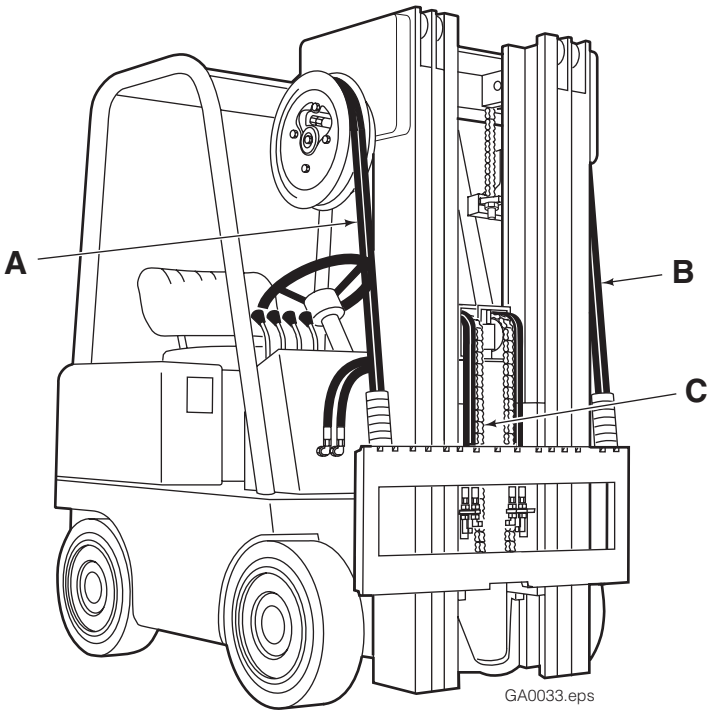


### A and B
RH and LH THINLINE™ 2-Port Hose Reel Groups.

**OR**

### A and C
RH THINLINE™ 2-Port Hose Reel Group and Mast Single Internal Hose Reeving Group.

## 2.2-2 Attachment Installation

Follow the steps shown to install the attachment on the truck. Read and understand all WARNING statements. If you don't understand a procedure, ask your supervisor, or call the nearest Cascade Service Department for assistance.

### 1 Attach overhead hoist

**A** Remove banding, set attachment upright on pallet.

**B** Remove bolt-on lower mounting hooks (if equipped).

**WARNING**: Check the attachment weight (located on the nameplate) to make sure the overhead hoist and chains or straps are at least the rated capacity of the attachment.

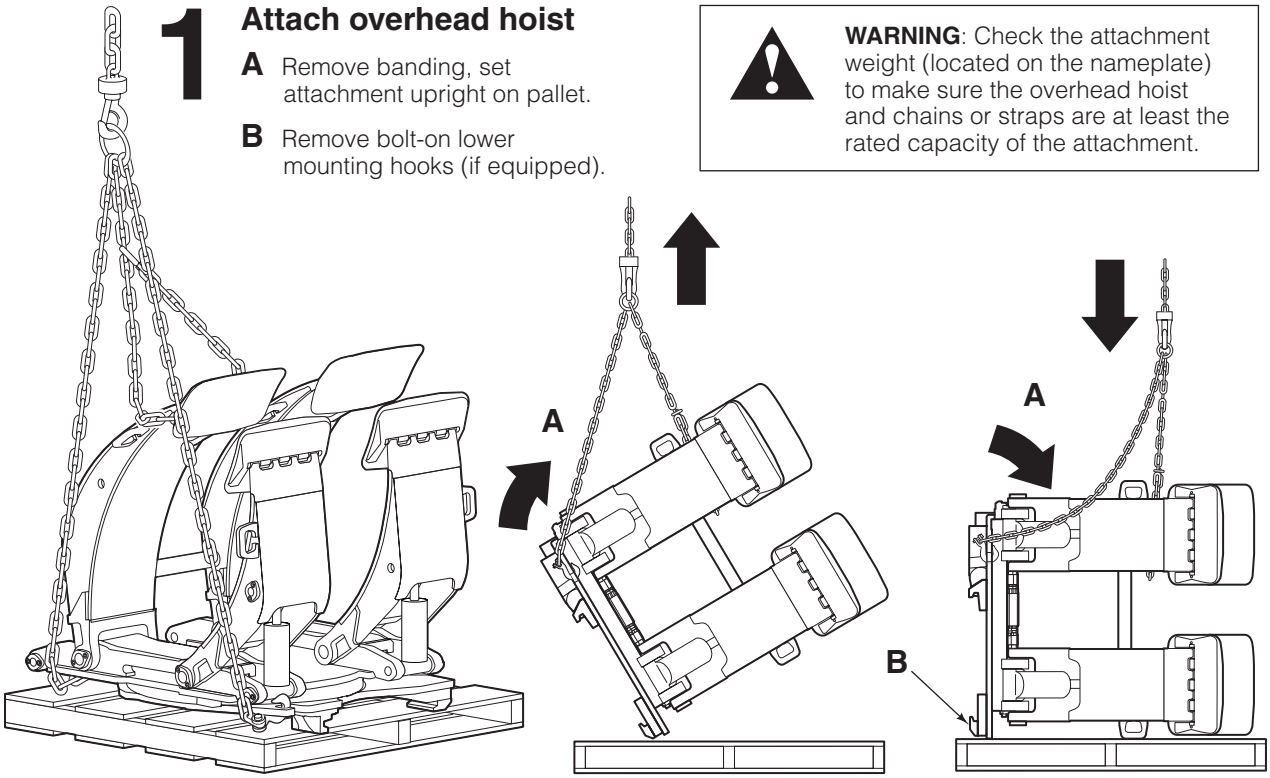


RC2842.eps

### 2 Unlock Quick-Change lower mounting hooks

Move hooks into unlocked position (pin in lower hole).

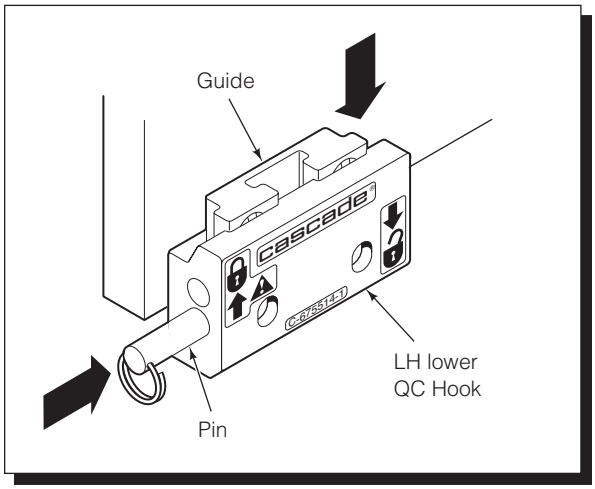


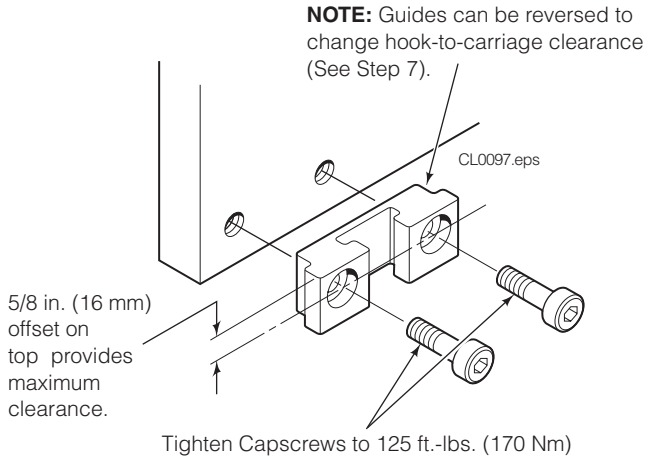

## 3 Preparing Hoses

**A** Position truck carriage behind attachment.

**B** Determine hose lengths required.

**C** Cut hoses to length, install end fittings.

**CAUTION**: Use No. 6 Hoses, 2300 psi (160 bar) working pressure rated for all functions.

**INSTALLATION USING RH & LH 2-PORT THINLINE™ HOSE REELS:**

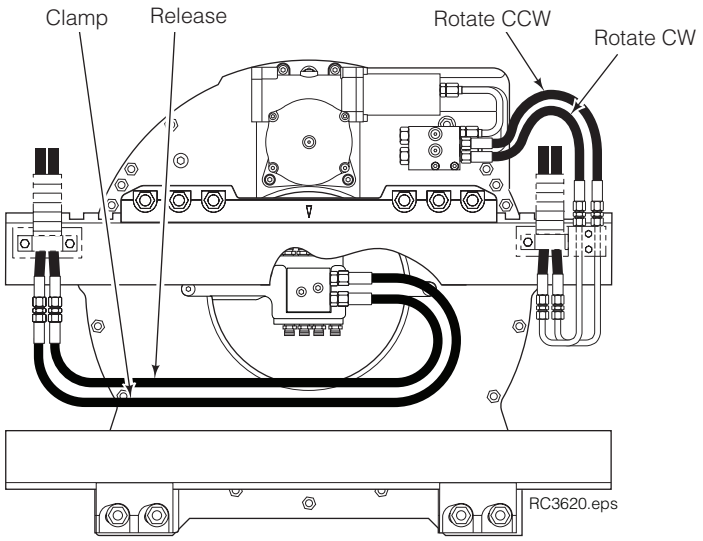


## 4 Flush hydraulic supply hoses

**A** Install hoses as shown.

**B** Operate auxiliary valves for 30 sec.

**C** Remove union fittings.

**D** Install hoses to attachment fittings as shown in Step 3 above.

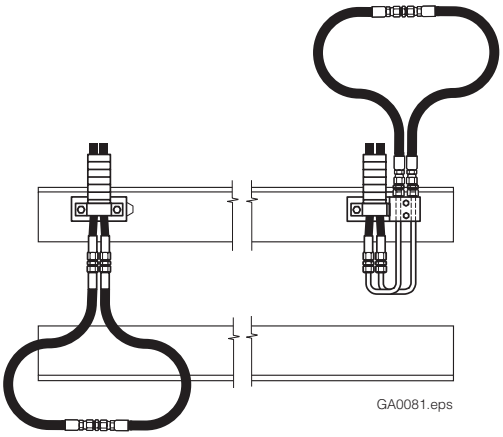


## 5 Check oil level

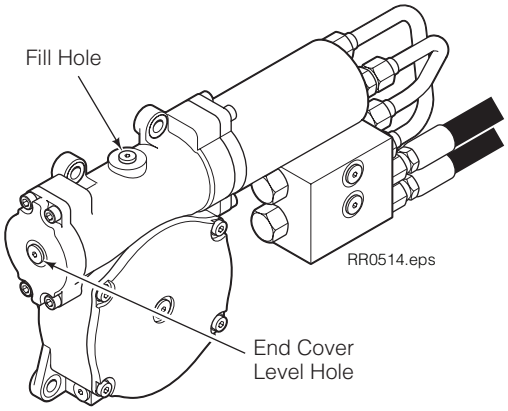


If necessary, fill gearbox with Cascade Gear Lube 656300 or equivalent SAE 90 wt. gear lube (AGMA 'mild' 6EP Gear Oil).

## 6 Mount attachment on truck carriage

**A** Center truck behind attachment.

**B** Tilt forward and raise carriage into position.

**C** Engage upper mounting hook with carriage. Make sure center locator tab engages center notch on top carriage bar.

**D** Lift attachment 2 in. (5 cm) off pallet.

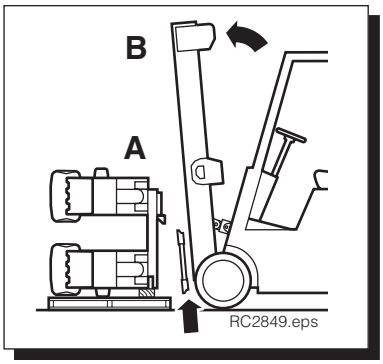


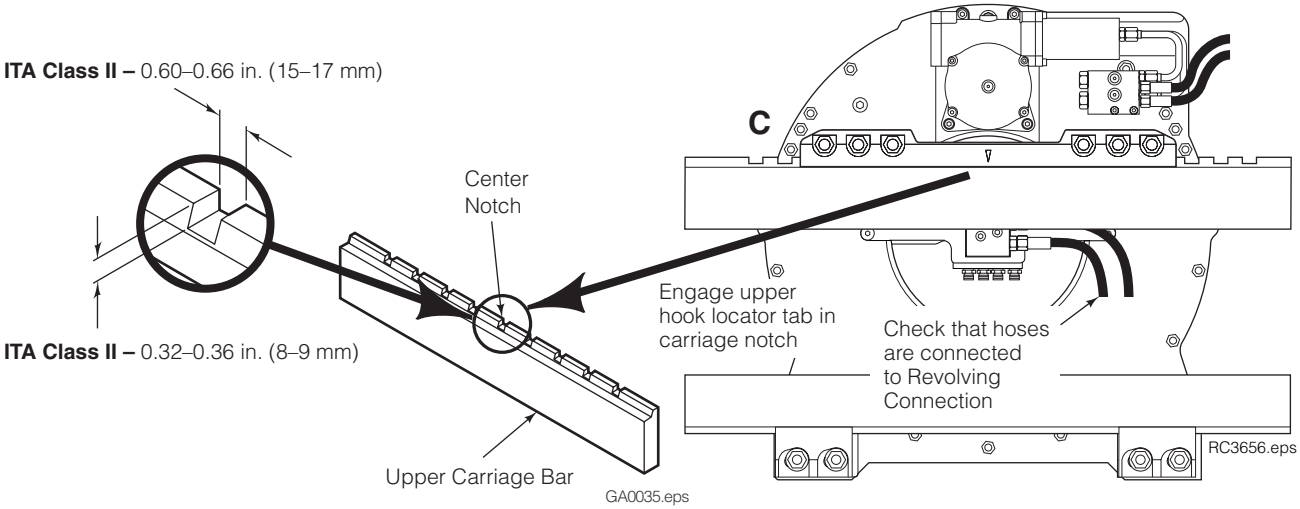


## 7 Install and engage lower hooks

### BOLT-ON TYPE

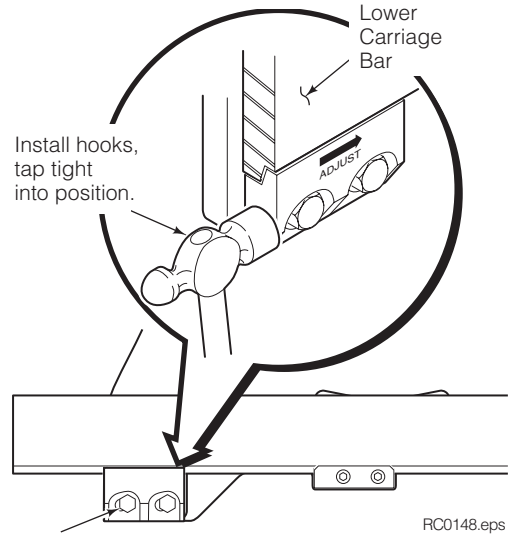


Tighten Capscrews to 122 ft.-lbs. (165 Nm)

### QUICK-CHANGE TYPE (OPTIONAL)

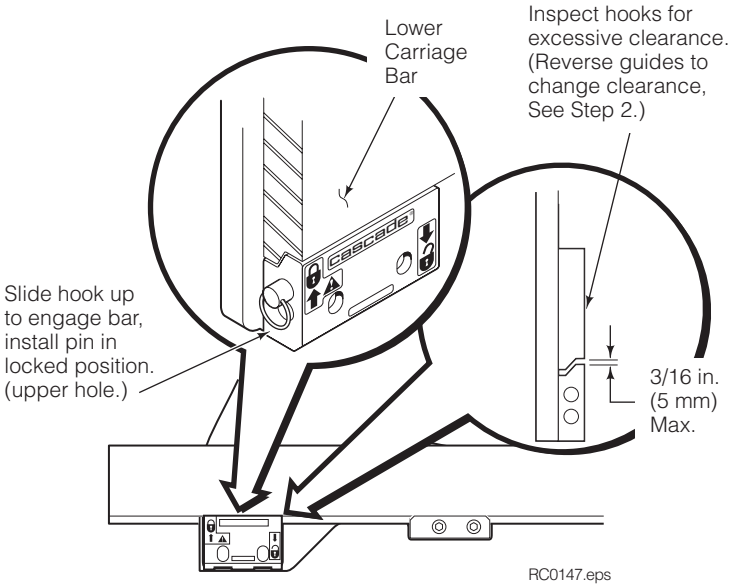

## 8 Connect hoses to hose terminal fittings

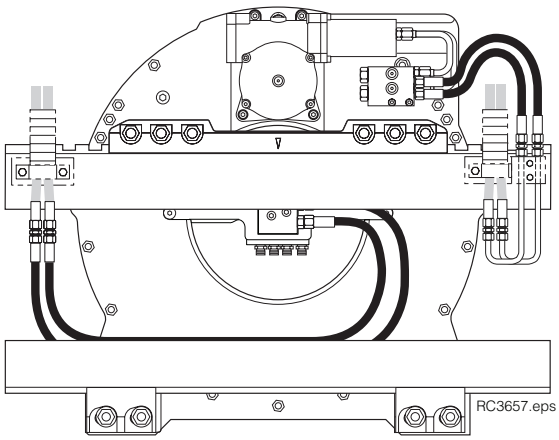


**Back (Driver's) View**

## 9 Install stop block kit

- Locate a stop block on the outside of each upper hook. Preheat stop block and carriage bar weld area to 325 ° F (180 ° C).
- Use AWS E7018 low hydrogen rod and weld a .25 in. (6 mm) fillet full length on three sides of each stop block.

  **NOTE:** Do not weld stop block on inside.

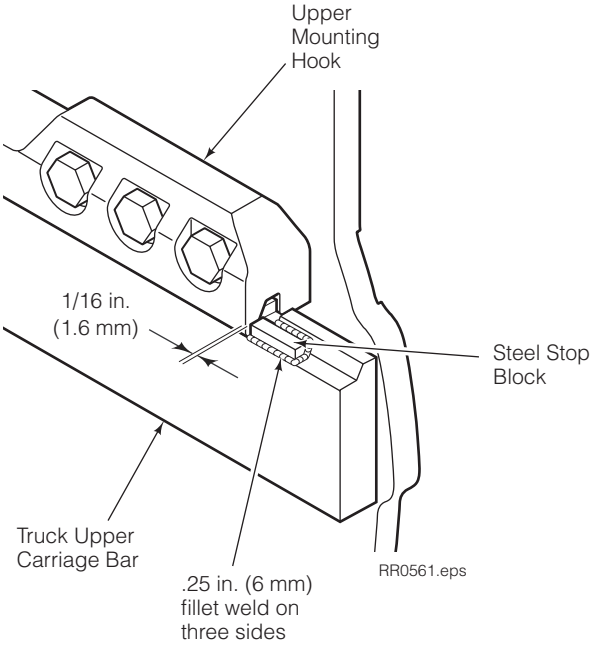

# 10 Cycle attachment functions

**WARNING:** Make sure all personnel are clear of attachment during testing.

- With no load, cycle all functions several times.
- Check functions for operation in accordance with ANSI (ISO) standards.
- Clamp and rotate a maximum load, check for smoothness and normal rotation.
- Check for leaks at fittings and cylinder rod ends.

**WARNING**: Truck control handle and attachment function activation shown here conforms to ASME/ANSI B56.1 recommended practices. Failure to follow these practices may lead to serious bodily injury or property damage. End user, dealer and OEMs should review any deviation from the practices for safe operation.

***LONG ARM***
*(vertical & horizontal positions only)*

**C** Release

**D** Clamp

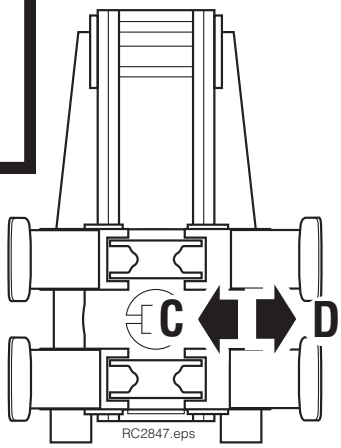


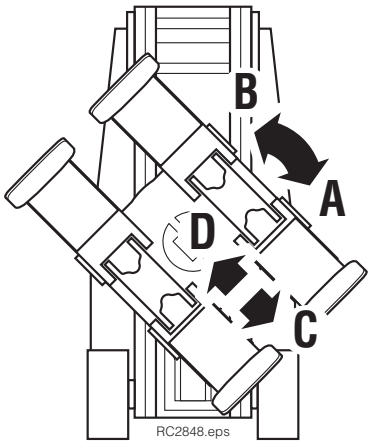


***ROTATE***
*(Driver's view)*

**A** Counterclockwise (CCW)

**B** Clockwise (CW)

***SHORT ARM***
*(45-degree position only)*

**C** Open

**D** Close

## Auxiliary Valve Functions

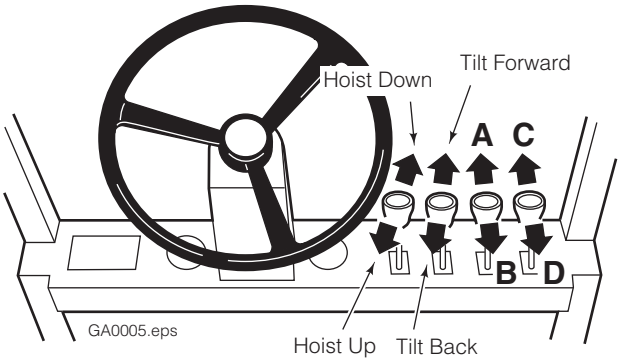

## 3.1 100-Hour Maintenance

Every time the lift truck is serviced or every 100 hours of truck operation, whichever comes first, complete the following maintenance procedures:

- Check for loose or missing bolts, worn or damaged hoses and hydraulic leaks.
- Check edges of contact pads for wear or sharp nicks that could damage or tear paper rolls. Grind edges smooth.
- Check the torque on the stop block capscrews and tighten to 80 ft.-lbs. (110 Nm) if necessary.
- Check that load-holding hydraulic system is functioning properly. Cascade Clamp Force Indicators 830141 and 832442 are available for this test.
- Check decals and nameplate for legibility.

## 3.2 500-Hour Maintenance

After each 500 hours of truck operation, in addition to the 100-hour maintenance, perform the following procedures:

- Check sample of baseplate-to-bearing capscrews for proper torque value. See Technical Bulletin TB183 or the Service section in this manual (5.9-2) for checking and replacement procedures.
- Check sample of bearing-to-faceplate capscrews for proper torque value. See Technical Bulletin TB183 or the Service section of this manual (5.9.2) for checking and replacement procedures.
- Tighten lower mounting hook capscrews to 122 ft.-lbs. (165 Nm).
- Tighten rotator drive capscrews to 24 ft.-lbs. (32 Nm).
- Lubricate rotator bearing assembly ball race (A) and gear (B) with EP-2 grease. (Whitmore 'Omnitask' or equivalent). Rotate attachment in 90-degree increments and grease in each position.
- **For Initial 500 Hours –** Check rotator drive gearcase oil level. Oil should be filled up to the end cover level hole. Add oil through the top fill hole. If necessary, fill with Cascade Rotator Drive Lubricant, Part No. 656300 or SAE 90 wt. gear lube (AGMA 'mild' 6 EP Gear Oil). Replace the plug.
- Inspect all arm, frame and cylinder pivot bushings for wear. Replace if necessary.
- Inspect all load-bearing structural welds on arms, arm pivots and cylinder pivot areas for visual cracks. Replace components as required.

**WARNING:** After completing any service procedure, always test the attachment through five complete cycles. First test the attachment empty, then test with a load to make sure the attachment operates correctly before returning it to the job.

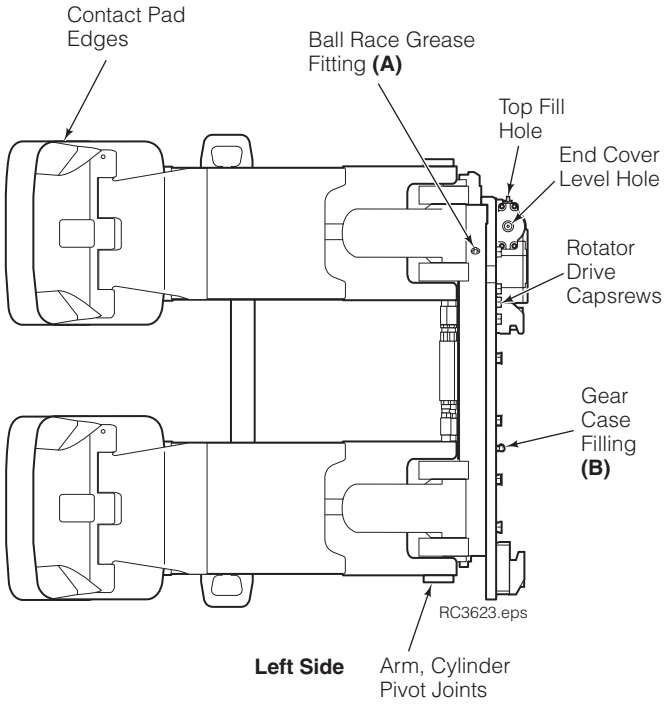


**WARNING:** A sampling of faceplate and baseplate bearing assembly capscrews must be checked for proper torque at 500 hours (see TB183). A complete inspection is required every 2000 hours. Failure to keep the capscrews tightened can result in attachment damage and serious injury.

## 3.3 1000-Hour Maintenance

After each 1000 hours of truck operation, in addition to the 100, 500 and 1000-hour maintenance, perform the following procedures:

- Change rotator drive gearcase oil. Drain oil out the bottom case hole. Fill through top fill hole up to the end cover level hole. Use Cascade Rotator Drive Lubricant Part No. 656300, or SAE 90 wt. gear lube (AGMA 'mild' 6 EP Dear Oil). Replace plug.

## 3.4 2000-Hour Maintenance

After each 2000 hours of truck operation, in addition to the 100, 500 and 1000-hour maintenance, perform the following procedures:

- Check **all** rotation bearing capscrews for proper torque value. See Technical Bulletin TB183 or the Service section of this manual (5.9-2) for checking and replacement procedures.
- Inspect all arm and cylinder pivot pins for wear and replace if necessary.
- Check rotator drive gearcase oil level. Lubricant should be filled up to end cover level hole. If necessary fill with Cascade Rotator Drive Lubricant, Part No. 656300 or SAE 90 wt. gear lube (AGMA 'mild' 6 EP Gear Oil). Replace the plug.

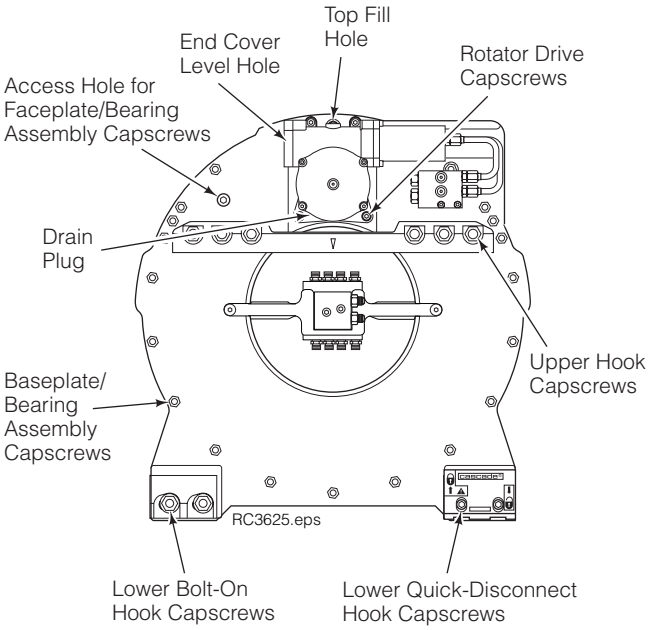


**Back (Driver's) View**

# 4.1 General Procedures

## 4.1-1 Truck System Requirements

- Truck hydraulic pressure should be within the range shown in Specifications, Section 6.1. Pressure to the attachment must not exceed 2300 psi (160 bar).
- Hydraulic flow should be within the volume range as shown in Specifications, Section 6.1.
- Hydraulic fluid supplied to the attachment must meet the requirements as shown in Specifications, Section 6.1.

**WARNING**: Before servicing any hydraulic component, relieve pressure in the system. Turn the truck off and move the truck auxiliary control valves several times in both directions.

After completing any service procedure, test the attachment through several cycles. First test the attachment empty to bleed any air trapped in the system to the truck tank. Then test the Clamp with a load to be sure it operates correctly before returning to the job.

Stay clear of the load while testing. Do not raise the load more than 4 in. (10 cm) off the floor while testing.

## 4.1-2 Tools Required

In addition to a normal selection of hand tools, the following will be required:

- Inline Flow Meter Kit:
  20 GPM (75 L/min.) - Cascade Part No. 671477.
- Pressure Gauge Kit:
  5000 psi (345 bar) - Cascade Part No. 671212. Two kits are required.

  **OR**

  Wireless Pressure Monitor:
  Pressure transducers monitor the hydraulic pressure, data is transmitted wirelessly to the receiver/display.
  12V Kit with 2 pressure transducers - Part No. 6803615
  24-48V Kit with 2 pressure transducers - Part No. 6803618
  12V Kit with 4 pressure transducers - Part No. 6803616
  24-48V Kit with 4 pressure transducers - Part No. 6803619
- Assorted fittings and hoses to adapt the gauges and flowmeter to the components being tested.

### Flow Meter Kit 671477

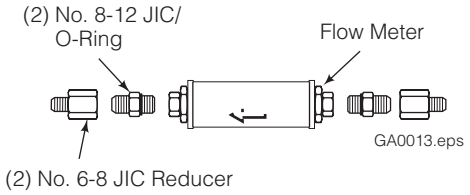


### Pressure Gauge Kit 671212

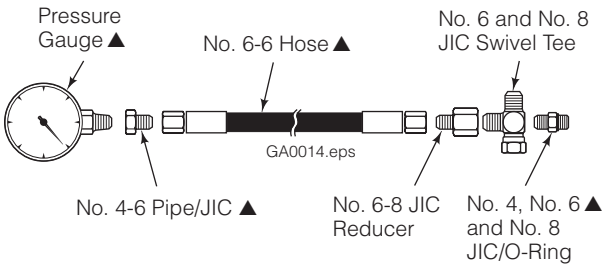


### Diagnostic Quick-Disconnects

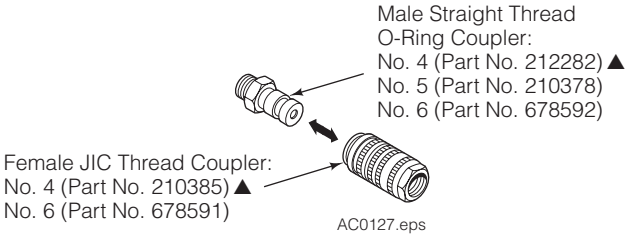


▲ Included in Diagnostics Kit 394382.

### Wireless Pressure Monitor Kits 6803615, 6803616, 6803618, 6803619

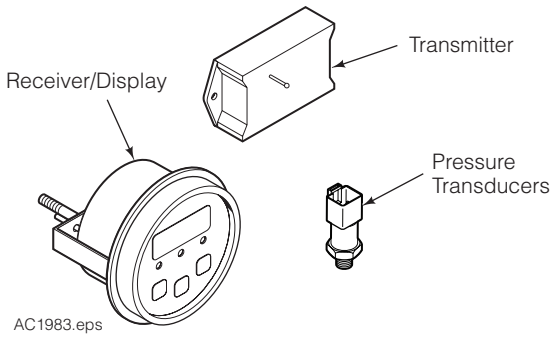

## 4.1-3 Troubleshooting Chart

**Determine All The Facts –** It is important that all the facts regarding the problem are gathered before beginning service procedures. The first step is to talk to the equipment operator. Ask for a complete description of the malfunction. The following guidelines can then be used as a starting point to begin troubleshooting procedures:

**Clamp Circuit**
- Attachment drops roll after it has been picked up.
- Attachment will not carry rolls to its rated capacity.
- Attachment arms will not function properly.

To correct one of these problems, see Section 4.3.

**Rotate Circuit**
- Attachment will not rotate.
- Attachment will not rotate rolls up to its rated capacity.
- Attachment rotates in one direction only.

To correct one of these problems, see Section 4.4.

# 4.2 Plumbing

## 4.2-1 Hosing Diagram

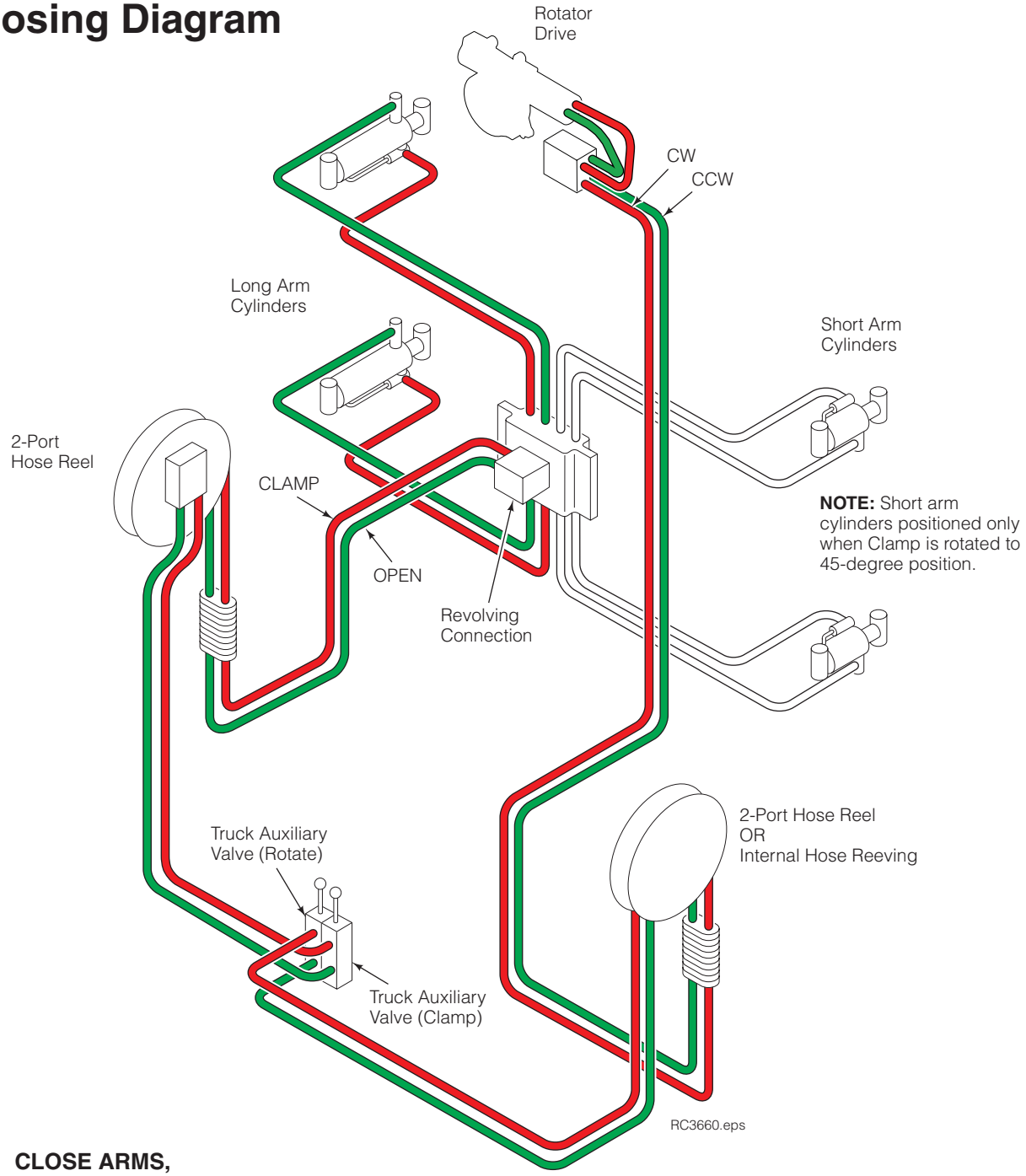


**CLOSE ARMS,**
**ROTATE CLOCKWISE**

**PRESSURE**
**RETURN**

**NOTE:** For **OPEN ARMS and ROTATE COUNTERCLOCKWISE**, reverse the colors shown.

## 4.2-2 Hydraulic Schematic - Solid Long Arm

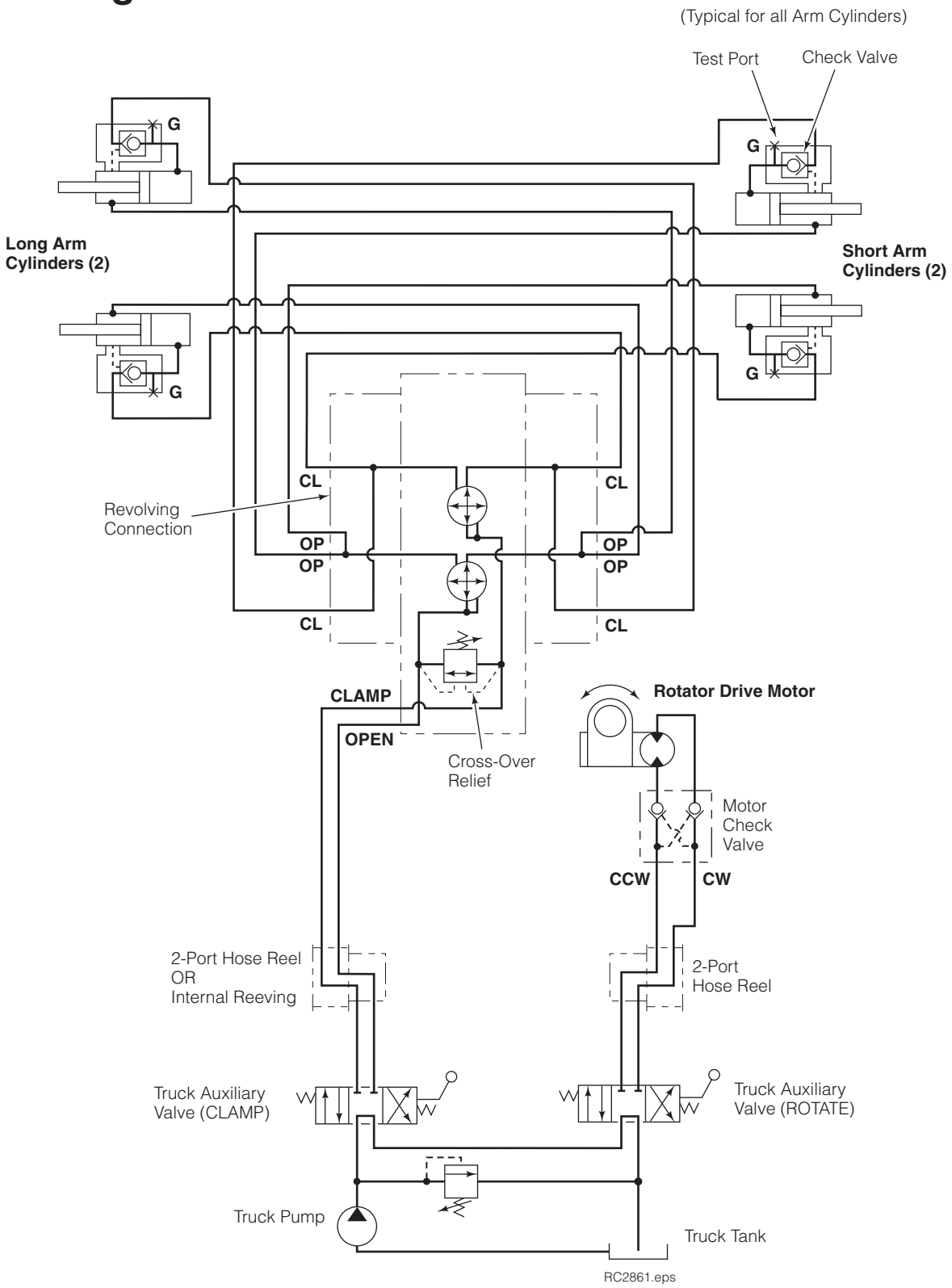

## 4.3 Clamp Function

There are five potential problem areas that can affect the clamp function:

- Operator may be handling roll incorrectly. Loads may be too heavy, exceeding capacity of Clamp. Refer to Operator's Guide for suggested procedures.
- Low hydraulic pressure or flow from lift truck.
- External leaks.
- Defective solenoid coil or valve (solenoid equipped attachments).
- Worn/defective revolving connection shaft seals, cartridge valves, cylinder seals or check valves.

### 4.3-1 Supply Circuit Test

> **WARNING**: Before removing hydraulic lines, relieve pressure in the hydraulic system. Turn the truck off and open the truck auxiliary control valves several times in both directions.

1. Check the pressure delivered by the truck. Refer to the truck Service Manual. The pressure must be within 100 psi (7 bar) of specified truck pressure. **Pressure to the attachment must not exceed 2300 psi (160 bar),** measured at the carriage hose terminal.
2. Check the flow volume at the carriage hose terminal. See Section 6.1-1 for recommended flow volumes. If the truck pressure and flow are correct, proceed with the Clamp circuit pressure test.

### 4.3-2 Clamp Circuit Test

> **WARNING**: Before removing hydraulic lines, position both arms at midstroke to relieve cylinder pressure. Turn the truck off and open the truck auxiliary control valves several times in both directions.

1. Check for external leaks at the cylinders and revolving connection.
2. **Long Arm Cylinders** – Install a pressure gauge to each long arm cylinder's test port. Close the long arm fully and hold the handle in the CLAMP position a few seconds to develop full truck system pressure. Watch the gauge pressure readings.

   **Short Arm Cylinders –** Install a pressure gauge on each short arm cylinder's gauge port. Rotate the Clamp to the 45-degree position. Close the short arm fully and hold the handle in the CLAMP position a few seconds to develop full truck system pressure. Watch the gauge pressure readings.

   - If the initial gauge pressures are not within 100 psi (7 bar) of system pressure measured at the hose terminal, the revolving connection may be faulty and require service (see Section 5.6).
   - If one of the gauge pressures drops more than 150 psi (10 bar) initially, and additional drop exceeds 25 psi (2 bar) per minute, the cylinder check valve cartridge or piston seals may be faulty. Continue troubleshooting.
   - If both gauge pressures do not drop more than 150 psi (10 bar) initially, and additional drop does not exceed 25 psi (2 bar) per minute, the problem is not hydraulic (see Section 4.3).
3. Position both arms at midstroke to relieve cylinder pressure. Remove, swap and reinstall the cylinder check valve cartridges.
4. **Long Arm Cylinders –** Close the long arm fully and hold the handle in the CLAMP position a few seconds to develop full truck system pressure. Watch the gauge pressure readings.

   **Short Arm Cylinders –** Rotate the Roll Clamp to the 45-degree position. Close the short arm fully and hold the handle in the CLAMP position a few seconds to develop full truck system pressure. Watch the gauge pressure readings.

   - If the gauge pressure on the cylinder continues to drop more than 150 psi (10 bar) initially, and additional drop exceeds 25 psi (2 bar) per minute, the cylinder piston seals are faulty (see Section 5.7 for cylinder service)
   - If the gauge pressure on the cylinder does not drop more than 150 psi (10 bar) initially, and additional drop does not exceed 25 psi (2 bar) per minute, the check valve (now in the other cylinder) is faulty and requires replacement (see Section 5.7-3).

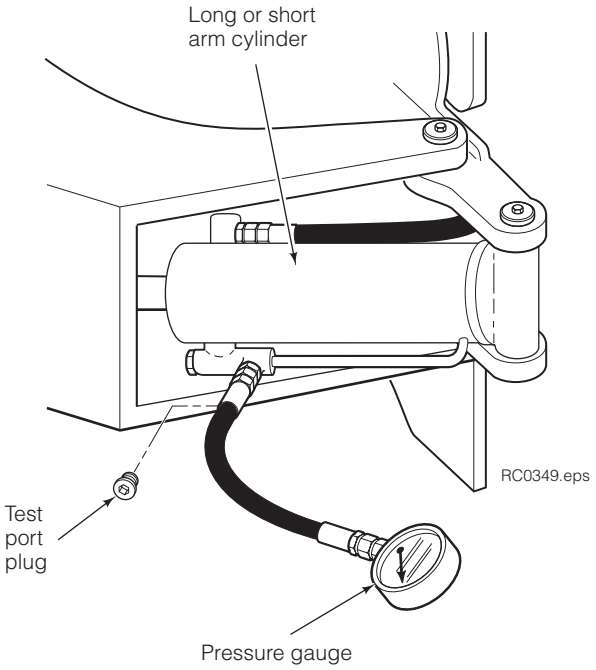

# 4.4 Rotation Function

There are four potential problem areas that can affect the rotation function:

- Operator may be handling roll incorrectly. Loads may be too heavy or rotated off-center, exceeding capacity of Clamp. Refer to Operator's Guide for suggested handling procedures.
- Low hydraulic pressure or flow from lift truck.
- Worn or defective hydraulic rotator motor.
- Worn or defective drive assembly or rotator frame bearing assembly.

## 4.4-1 Supply Circuit Test

**WARNING**: Before removing hydraulic lines, relieve pressure in the hydraulic system. Turn the truck off and open the truck auxiliary control valves several times in both directions.

1. Check for external leaks.
2. Check the pressure delivered by the truck. Refer to the truck Service Manual. The pressure must be within 100 psi (7 bar) of specified truck pressure. **Pressure to the attachment must not exceed 2300 psi (160 bar),** measured at the carriage hose terminal.
3. Check the flow volume at the carriage hose terminal. See Section 6.1-1 for recommended flow volumes. If the truck pressure and flow are correct, proceed with the Rotation circuit pressure test.

## 4.4-2 Rotation without Load

1. Install pressure gauges on the rotator motor fittings.
2. Rotate the attachment without a load and note pressure readings of both gauges.
   - If the attachment rotates in one direction faster than the other, or rotates in one direction only, the check valve assembly may need service (see Section 5.5).
   - If the lower gauge reading **exceeds** 500 psi (35 bar), there is excessive back pressure in the supply circuit. Check for restrictions such as numerous fittings, 90 degree fittings, or hose sizes less than No. 8.

## 4.4-3 Rotation with Load

1. Rotate a load requiring approximately 3/4 of the attachments's maximum torque capacity:

   **18H –** 40,000 in.-lbs. @ 2300 psi
   (4500 Nm @ 160 bar)

   Note gauge readings during rotation.
   - If the higher gauge reading is substantially **less** than the truck pressure as measured at the carriage hose terminal, the rotator motor geroler set may need repair. Refer to Section 5.4.
   - If the higher gauge reading is **close** to truck pressure as measured at the carriage hose terminal and no rotation occurs, the rotator motor output shaft or drive box may need repair. Continue troubleshooting.
2. Remove the motor from the drive box assembly as described in Section 5.4.
3. Reinstall the hoses to the rotator motor fittings. Actuate the rotate circuit.
   - If the rotator motor shows rotational output, the drive box may require service. Refer to Section 5.3.
   - If the rotator motor shows little or no rotational output, the rotator motor requires service. Refer to Section 5.4.

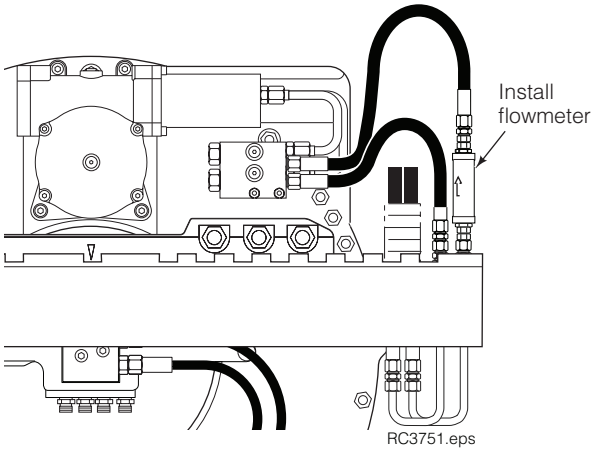


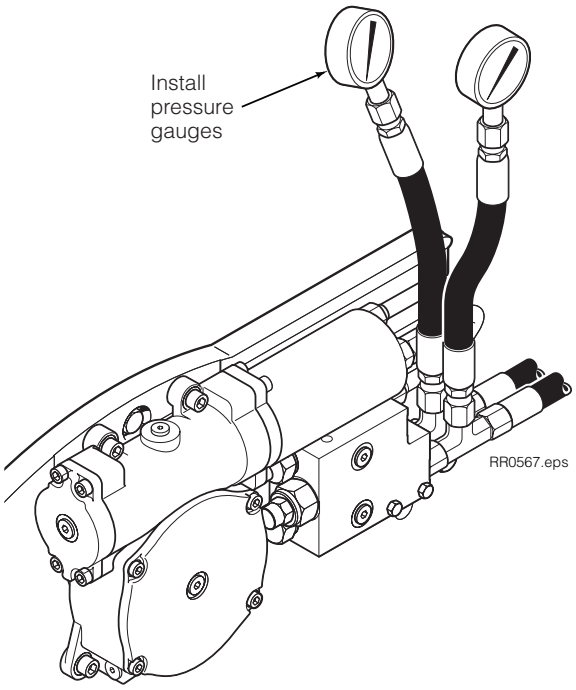

# 4.5 Electrical Circuit
## (Solenoid-equipped attachments)

Use the schematic shown and follow the steps below.

**1** Check the control knob circuit fuse. Replace if necessary.

**2** Check for loose electrical connections at the truck ignition switch, control knob button, solenoid coil terminals and diode.

**3** Remove the diode from the solenoid coil terminal. Test with an ohmmeter for high resistance in one direction and no resistance in the other direction. If there is no resistance in both directions, replace the diode.

**NOTE:** When replacing the diode, the banded end must be connected to the coil and wiring as shown.

**4** Disconnect the electrical leads from the solenoid coil terminals. Use a voltmeter to determine if voltage is present at the electrical lead terminals when the button is depressed.

- If there is **no voltage** at the solenoid, troubleshoot the electrical circuit for shorts.
- If there is **voltage** at the solenoid, test for coil continuity.

**5** Test for coil continuity by placing an ohmmeter test lead on each solenoid coil terminal (ohmmeter on Rx1 scale).

- If there is an ohmmeter reading, and the coil matches the values below for the truck voltage, the coil is good.
- If the coil is good, but the solenoid does not 'click' when the control knob button is depressed, the solenoid cartridge may be jammed. Refer to Section 5.10.
- If there is no ohmmeter reading, the coil is defective and should be replaced. Refer to Section 5.10.

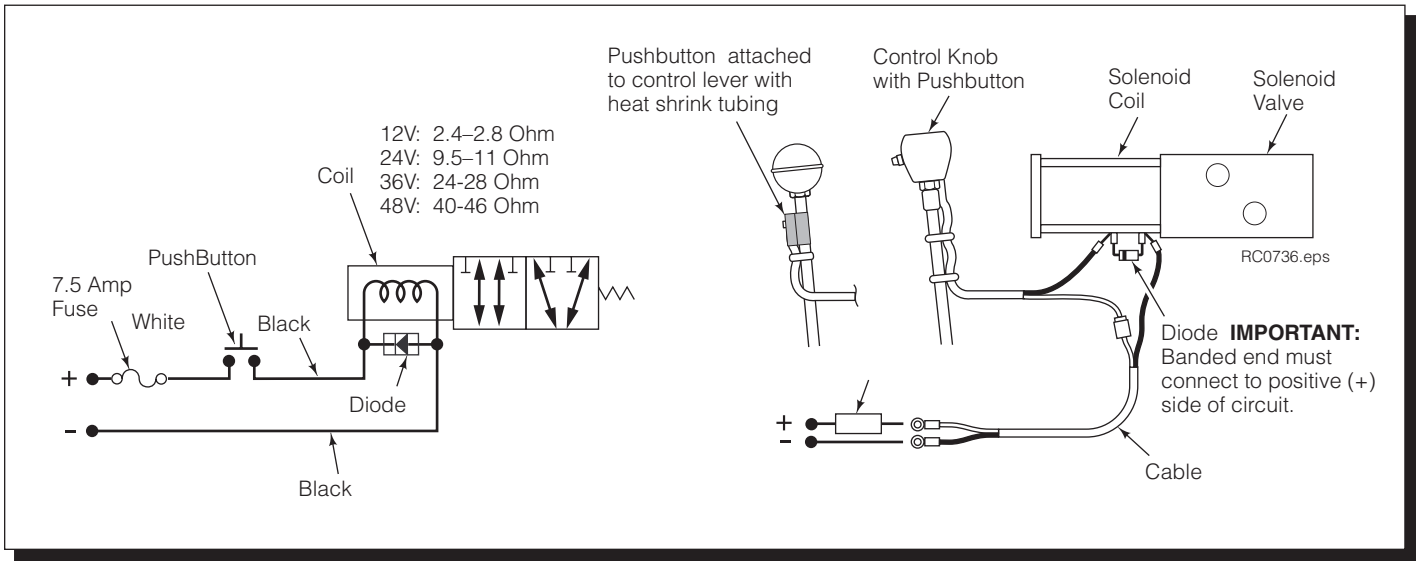

## 5.1 Attachment Removal

**1** Rotate the attachment to the vertical roll handling position. Extend the arms outside the frame width.

> **WARNING**: Before removing hydraulic lines, relieve pressure in the hydraulic system. Turn the truck off and open the truck auxiliary control valves several times in both directions.

**2** Disconnect and plug the hydraulic supply hoses to the Clamp. Tag hoses for reassembly.

**3** Disconnect the lower hooks:

**Bolt-On Hooks –** Remove the lower mounting hooks. For reassembly, tighten the capscrews to 122 ft.-lbs. (165 Nm).

**Quick-Change Hooks –** Pull out the locking pins and drop the lower hooks to the unlocked position. Reinstall the pins in the lower holes. For reassembly, slide the hooks up to the locked position and install the locking pins in the top holes.

**4** Set the attachment on a pallet. Tilt the mast forward and lower the carriage to remove the attachment from the truck.

**5** For installation, reverse the above procedures with the following exceptions:

- Refer to Section 2, Installation, for complete installation procedures.

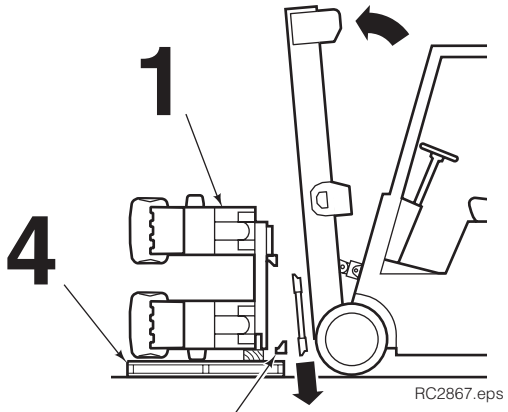


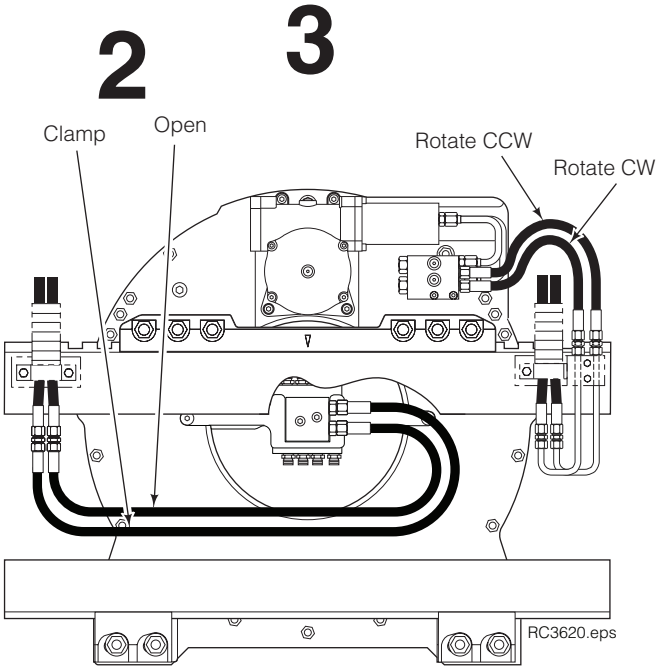


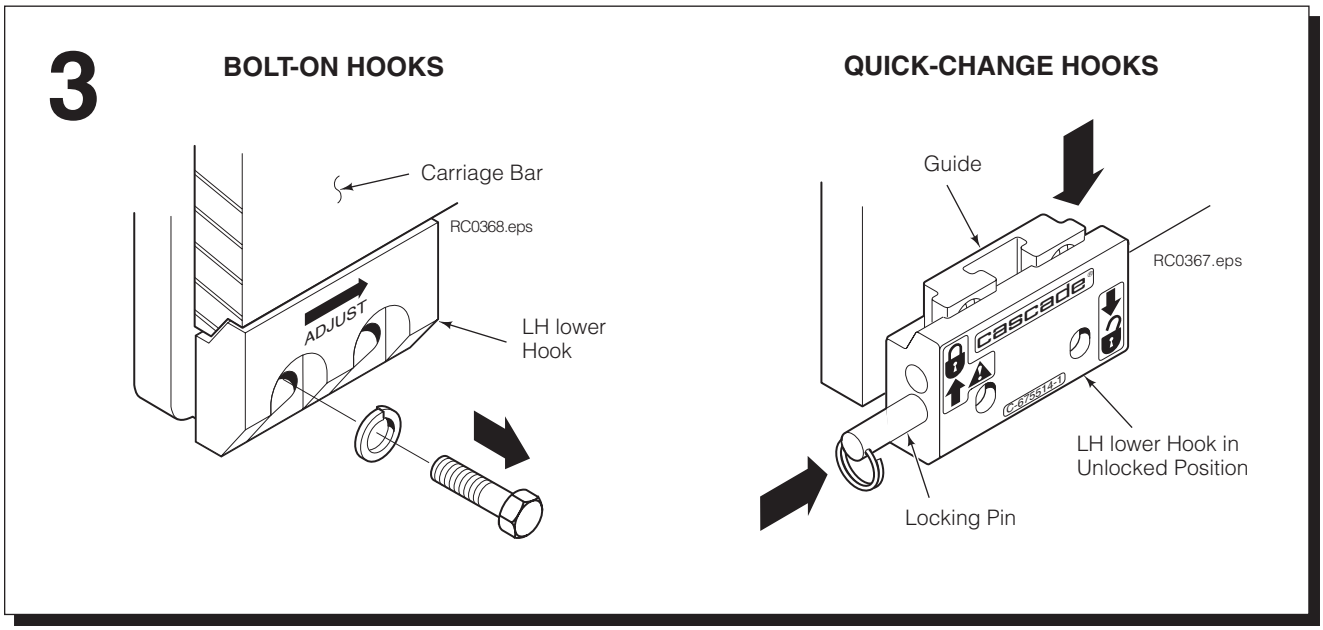

# 5.2 Arms

## 5.2-1 Arm Assembly – Removal and Installation

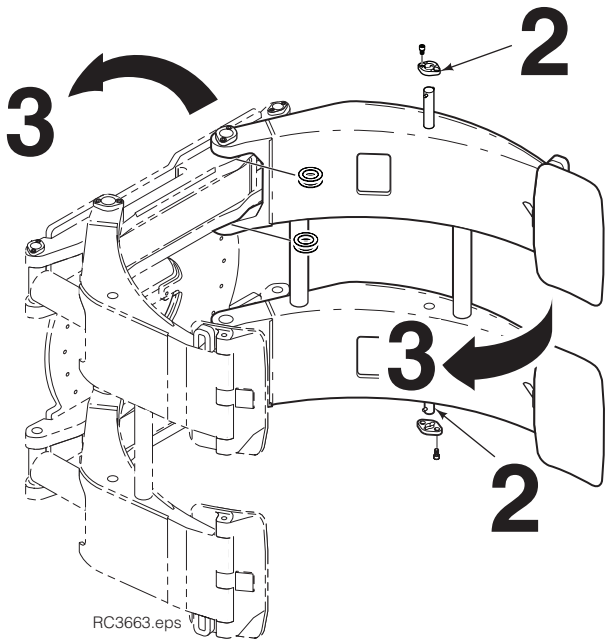


**1** Open the arm to be removed to mid-range position. Rotate the attachment to the vertical roll handling position.

**2** Remove the retainers and cylinder rod anchor pins from both cylinder rods. Retract the cylinders. For reassembly, tighten the retainer capscrews to 14 ft.-lbs. (19 Nm).

**3** Swing the arm being removed inward to contact the other arm. Rotate the attachment 90 degrees to position the arm being removed on top.

> **WARNING**: Make sure the hoist used to remove the arm has a rated capacity of at least 2000 lbs. (900 kg).

**4** Attach an overhead hoist to the arm and take up slack in the chain.

**5** Remove the retainers and arm pivot pins. Note location of shims. Lift away arm assembly. For reassembly, tighten the pivot pin retainer capscrews to 14 ft.-lbs. (19 Nm).

**6** For reassembly, reverse the above procedures.

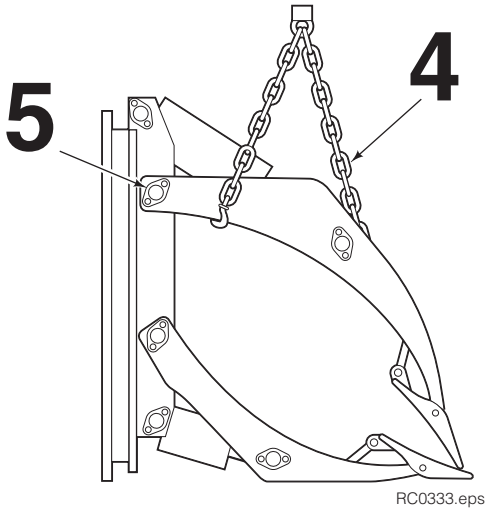

## 5.2-2 Contact Pad – Removal and Installation

1. Rotate the attachment to the vertical roll handling position. Lower the unit until the contact pads are approximately 1 in. (25 mm) off the ground.
2. Remove cotter pins from the clevis pins that fasten the links to the contact pad. Remove the clevis pins from the links while detaching the springs. Springs will remain fixed to the arms.
3. Remove the drive pins from the contact pad pivot points and remove the pivot pins.
4. Remove the contact pad. Pad links can be removed from the arm by rotating 90 degrees and pulling out.
5. For reassembly, reverse the above procedures with the following exceptions:
   - Inspect the arm tips and pivot pins for wear and repair/replace as necessary.
   - Install pivot pin and top drive pin. Make sure drive pin is an interference fit. Pin is .33 in. (8.4 mm) diameter x 1.50 in. (38.1 mm) long.
   - Check the condition of the springs. Replace as required.

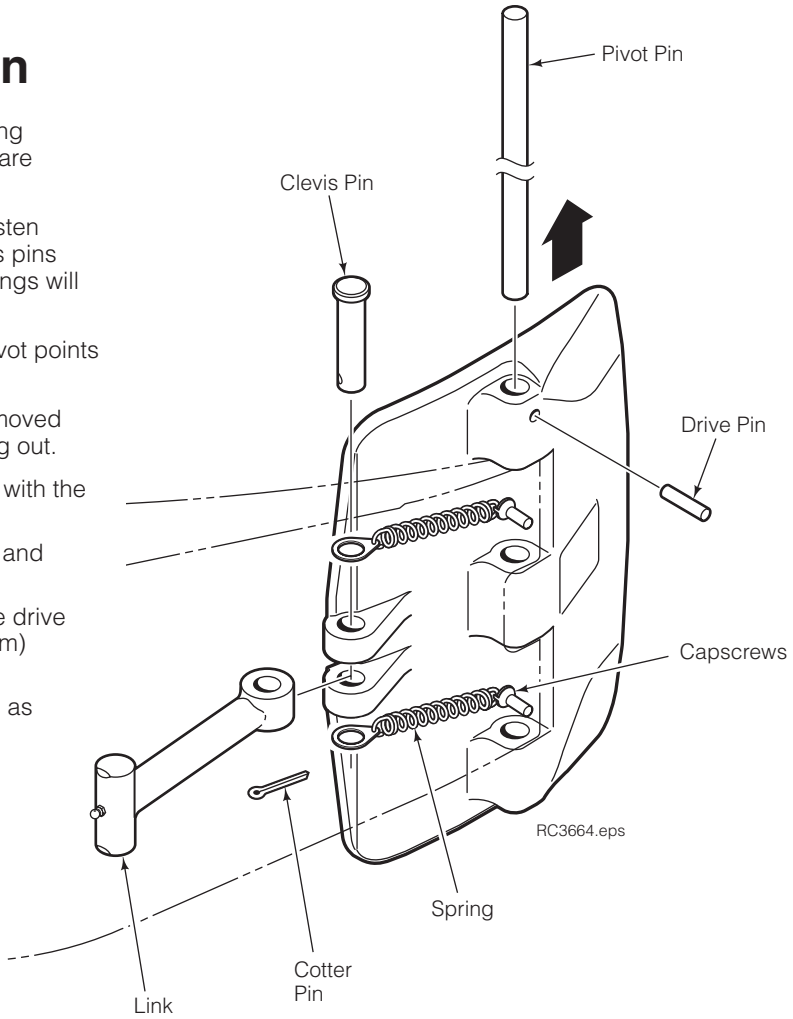

# 5.3 Drive Group

## 5.3-1 Drive Group Removal and Installation

1 Remove the attachment from the truck as described in Section 5.1.

2 Remove tubes connecting the motor to the valve.

3 Remove the four capscrews fastening the drive group to the baseplate. For reassembly, tighten the capscrews to 24 ft.-lbs. (32 Nm).

4 For reassembly, reverse the above procedures with the following exceptions:

- After the drive group has been reinstalled, check the gearcase oil level. Oil must be up to the bottom of the fill plug hole. Add oil through top fill hole. If necessary, fill with Cascade Gear Lube Part No. 656300, or SAE 90 wt. gear lube (AGMA 'mild' 6 EP Gear Lube).

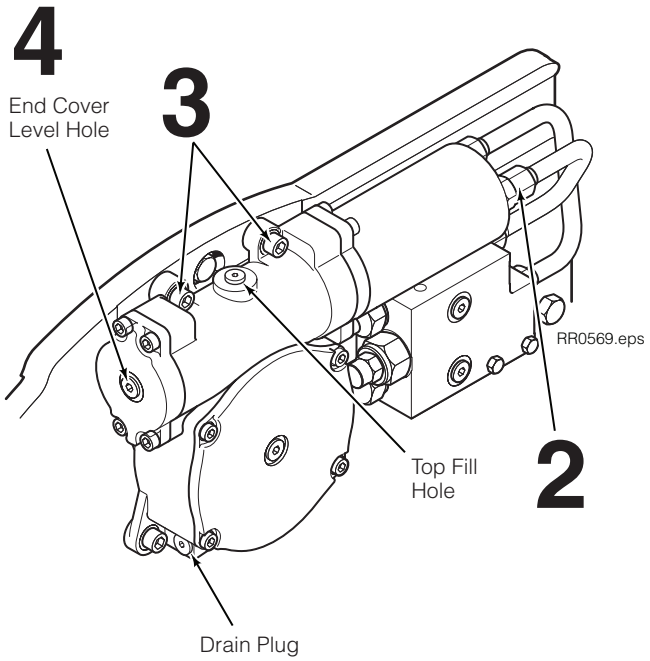


## 5.3-2 Drive Group Disassembly and Service

1 Drain oil out from the bottom housing hole.

2 Remove the drive group from the baseplate as described in Section 5.3-1.

3 Lay the drive group, pinion down, on two 4 x 4 in. (10 x 10 cm) wood blocks placed on both sides of the pinion.

4 Remove the four capscrews fastening the cover plate to the housing.

5 Remove the center capscrew plug from the cover plate and install an 3/8 in.-24 thread capscrew with a minimum thread length of 5 in. (127 mm). Remove the cover plate by turning the capscrew clockwise while lightly tapping around the sides of the cover plate.

6 Remove the four capscrews fastening the end cover to the housing.

7 Remove the drive motor as described in Section 5.4-1.

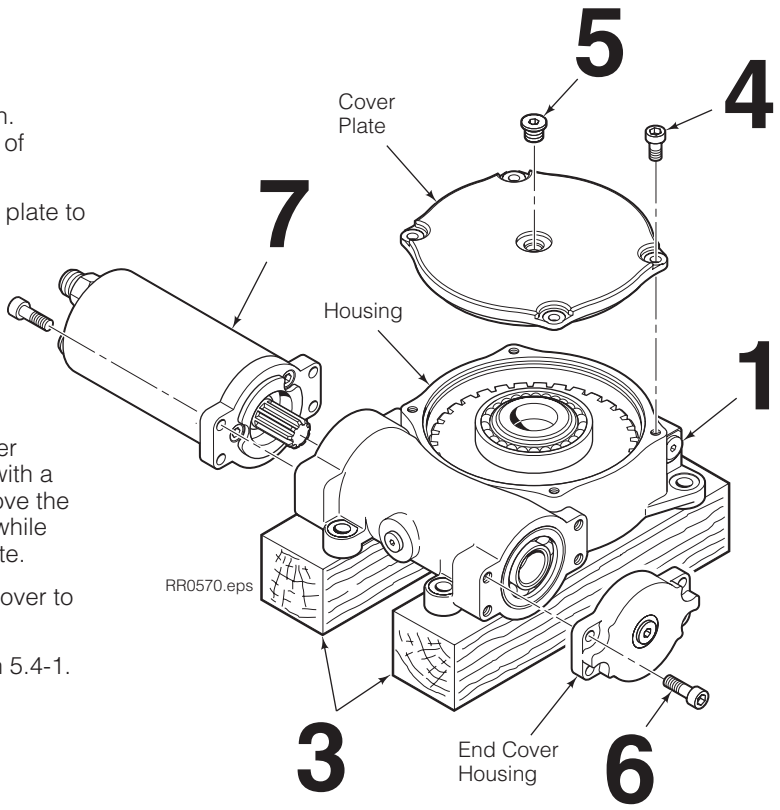

## 5.3-2 Drive Group Disassembly and Service (Continued)

**8** Tap the worm and bearing assembly out through the end-cover side of the housing. Note direction of bearings. Bearings are directional.

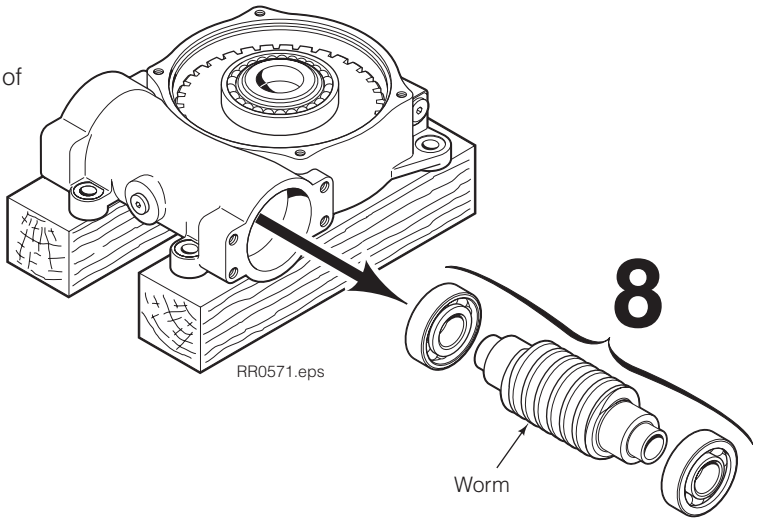


**9** Press the pinion gear, seal, pinion bearings and worm gear out of the housing as an assembly.

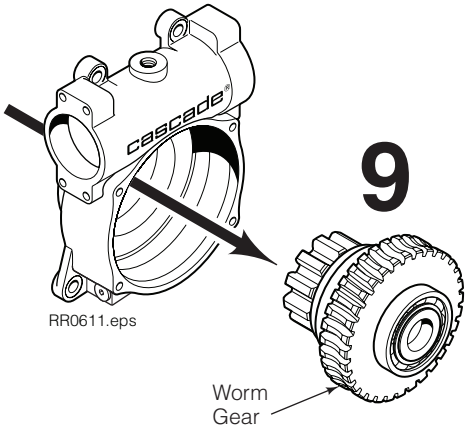


**10** Remove the retaining ring from the pinion gear shaft. Press the pinion gear from the worm ring gear and cover plate pinion bearing. Remove the pinion shaft key.

**11** Press the pinion gear out of the housing pinion bearing.

**12** Clean and inspect all components. Remove all dried sealant residue. Replace all worn items. Remove any burrs or sharp edges with emery cloth.

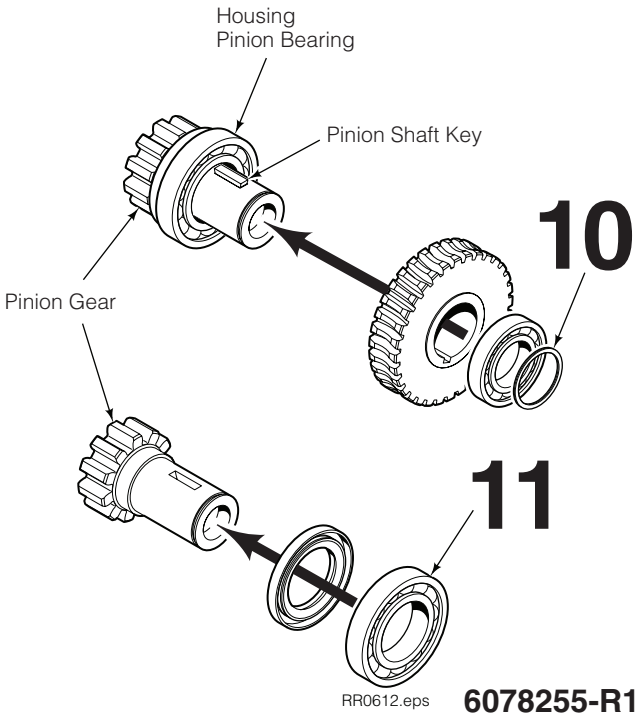

## 5.3-3 Drive Group Reassembly

Build up the pinion/worm gear assembly vertically with the pinion gear down.

1. Install pinion seal onto seal seating area.
2. Apply Loctite 271 (red) to the bearing seating area as shown. Press housing bearing onto the pinion shaft. Remove excess Loctite.
3. Install the key onto pinion shaft. Apply Loctite 271 (red) to the pinion shaft. Install the worm gear, cover plate pinion bearing and retaining ring of the pinion.
4. Apply Loctite 271 (red) to housing seating area and shoulder for the housing pinion bearing. Install the complete pinion assembly into the housing. Remove excess Loctite.

   **CAUTION:** Make sure Loctite does not squeeze into the seal or bearings.
5. Install the worm's bearing in the drive motor side of the housing.

   **CAUTION:** Bearing is directional. Install bearing with the part number side facing the motor.
6. Install the drive motor as described in Section 5.4-1.
7. Install the worm and second bearing in the housing. Fully engage the worm with the drive motor shaft.

   **CAUTION:** Bearing is directional. Install bearing with the part number side facing end cover.

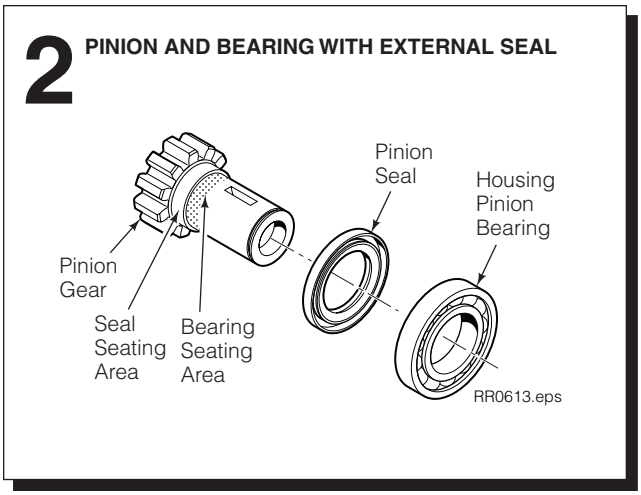


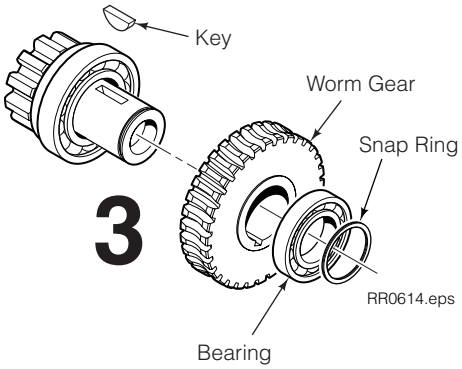


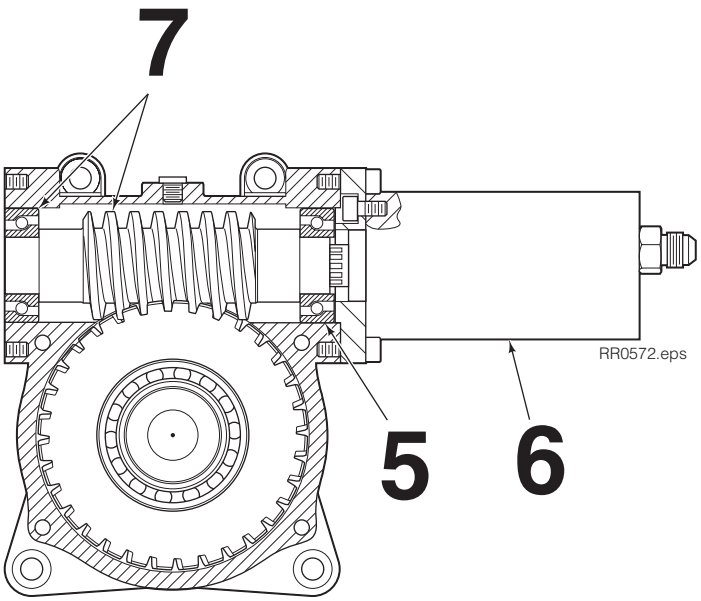


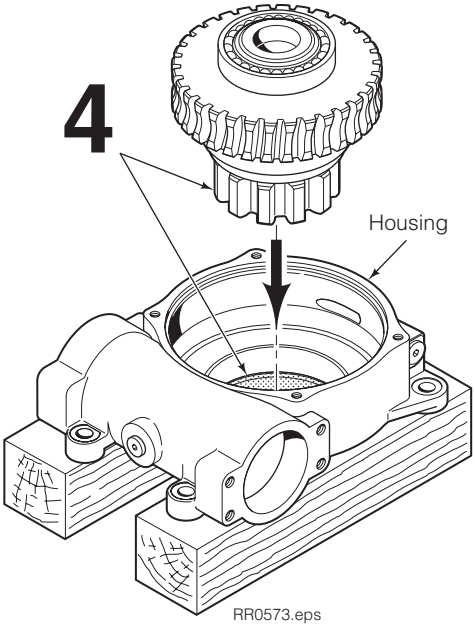

## 5.3-3 Drive Group Reassembly (Continued)

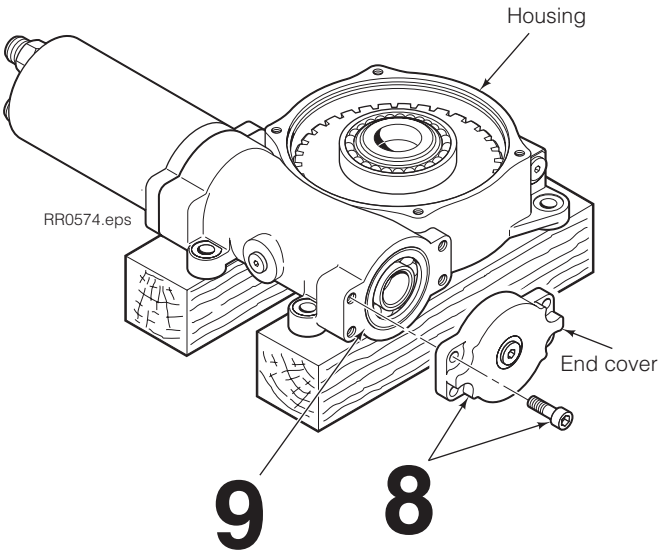


**8** Temporarily install the end cover without shims. Tighten the capscrews sequentially to 115 in.-lb. (13 Nm).

**9** Measure the gap between the end cover and housing in three places with a feeler gauge or 'Pastigage' thread and determine the minimum gap.

**10** Choose a combination of end cover shims equal to the minimum gap measured plus the next higher .005 in. (0.12 mm) increment. See examples below:

For .025–.029 in. measured gap, use .030 in. total shim thickness.

For .010–.014 in. measured gap, use .015 in. total shim thickness.

For .009 or less, use one (1) .010 in. shim. A minimum of one .010 shim is required for proper seal.

**NOTE:** Shim Service kit 6089414 contains the shims listed.

| Qty | Part No. | Color | Thickness |
|---|---|---|---|
| 2 | 6060031 | Blue | .005 in. (.125 mm) |
| 2 | 6060032 | Brown | .01 in. (.254 mm) |
| 2 | 6060033 | Pink | .015 in. (.381 mm) |
| 2 | 6060034 | Yellow | .02 in. (.508 mm) |

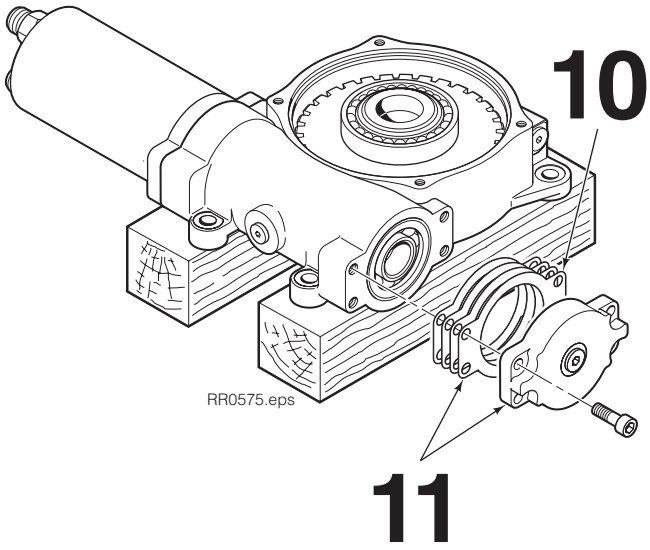


**11** Remove the end cover. Apply Loctite 515 sealant (Cascade Part No. 668184) to both surfaces of the shims and end cover. Install the shim pack and end cover. Tighten the capscrews to a torque of 115 in.-lbs. (13 Nm). Remove excess sealant.

**12** Install the cover plate and gasket. If the gaskets shows porosity, apply Loctite 515 sealent to cover face. Install the four cover plate capscrews and tighten to 71 in.-lbs (8 Nm). Install the center hole plug.

**14** Reinstall the drive group on the rotator baseplate as described in Section 5.3-1.

**14** Fill gearcase until oil begins to sun from end cover port. Use Cascade Gear Lube Part No. 656300, or SAE 90 wt. gear lube (AGMA 'mild' 6EP Gear Lube).

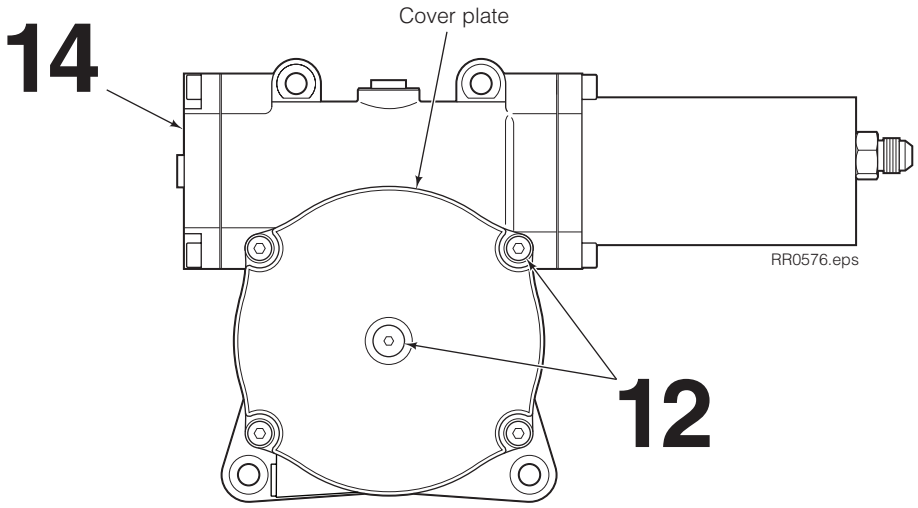

# 5.4 Drive Motor

## 5.4-1 Drive Motor Removal and Installation

**WARNING:** Before removing hydraulic lines, relieve pressure in the hydraulic system. Turn the truck off and open the truck auxiliary control valves several times in both directions.

1. Remove the attachment from the lift truck as described in Section 5.1.
2. Remove the drive group from the attachment as described in Section 5.3-1.
3. Remove the fill plug and drain the lubricant from the drive group.
4. Lay the drive group, pinion down, on two 4 x 4 in. (10 x 10 cm) wood blocks placed on both sides of the pinion gear.
5. Remove the four capscrews fastening the motor flange to the gearcase housing. Tap on the drive motor with a rubber mallet to separate the drive motor assembly from the gearcase.

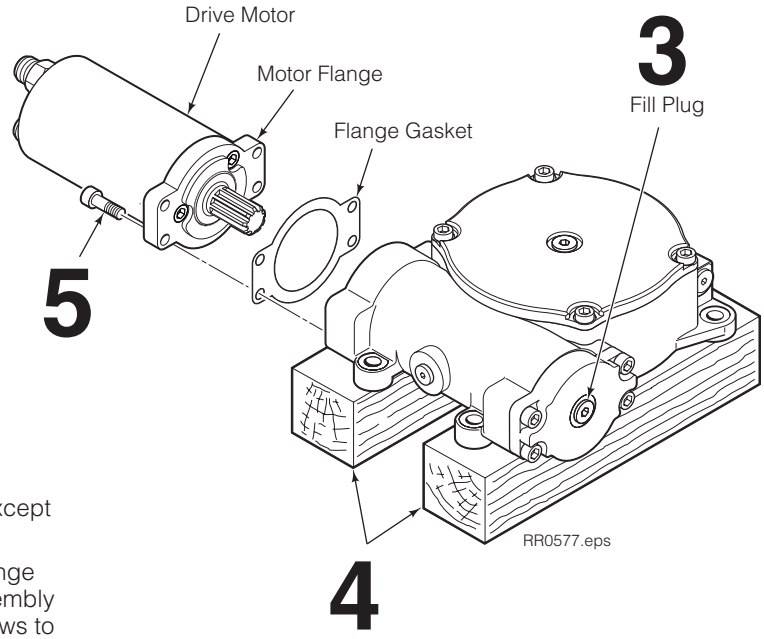


6. For reassembly, reverse the above procedures except as follows:
   - Apply Loctite 242 to the threads of the four flange caspcrews. Install the drive motor/flange assembly to the gearcase housing. Tighten the capscrews to 115 in.-lbs. (13 Nm).
   - Fill gearcase until oil begins to run from end cover port. Use Cascade Gear Lube Part No. 656300, or SAE 90 wt. gear lube (AGMA 'mild' 6 EP Gear Lube).

## 5.4-2 Drive Motor Disassembly

Cascade provides service replacement parts for the seals indicated with a ▲ below. Due to cost, if other parts need replacement, the complete drive motor assembly should be replaced.

**1** Remove the drive motor from the drive group as described in Section 5.3-1.

**IMPORTANT:** Clean the outside of the drive motor and service in a clean, dust-free work area. Use a soft-jawed vise for all service procedures.

**2** Make a scribe mark across the motor sections. This will help with timing and alignment for reassembly.

**3** Clamp the motor in a soft-jawed vise with the output shaft facing upward.

**4** Remove the three capscrews from the flange. Remove the flange. Keep track of O-ring between the flange and motor.

**5** Remove the five capscrews motor with a 3/16 in. allen wrench (hex key).

**6** Disassemble the motor as shown below. The motor can be taken apart in five groups.

**A** Remove the bearing housing group. Remove the output shaft from the bearing housing.

**CAUTION:** Leave the thrust bearing and thrust washer on the output shaft. Leave the output shaft spacer in the output shaft.

**B** Remove spool drive and drive.

**C** Remove drive and spacer with o-ring.

**D** Remove geroler set with o-ring.

**CAUTION:** Geroler spacers can fall out if not handled properly.

**E** Leave the valve housing in the vice. Remove the spool valve and O-ring from the valve housing.

**CAUTION:** Do not remove retaining rings and check balls from the spool valve.

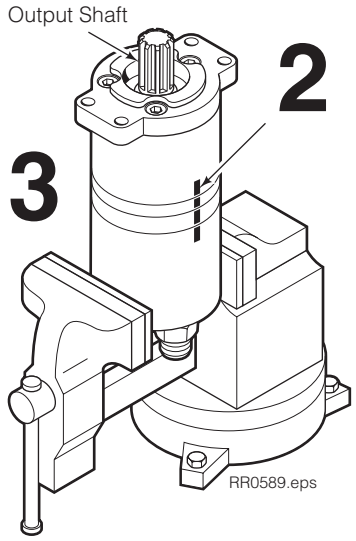


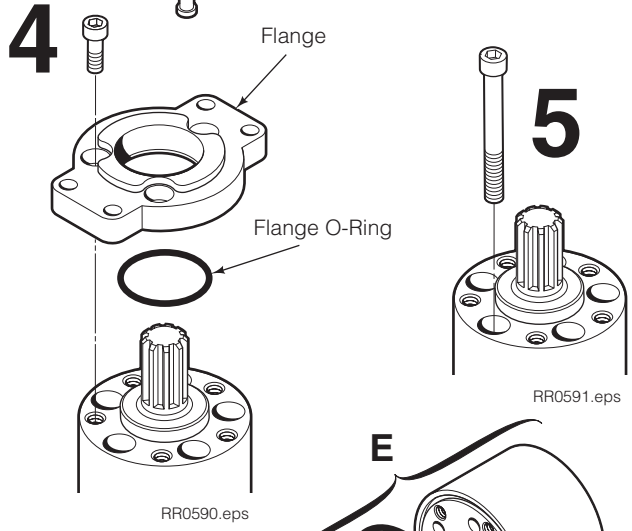


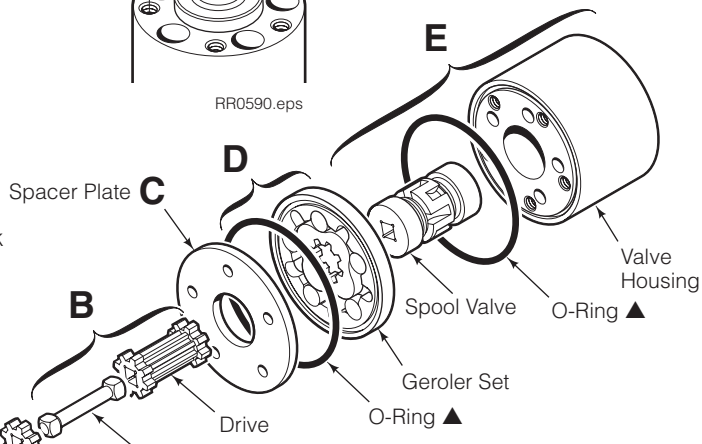


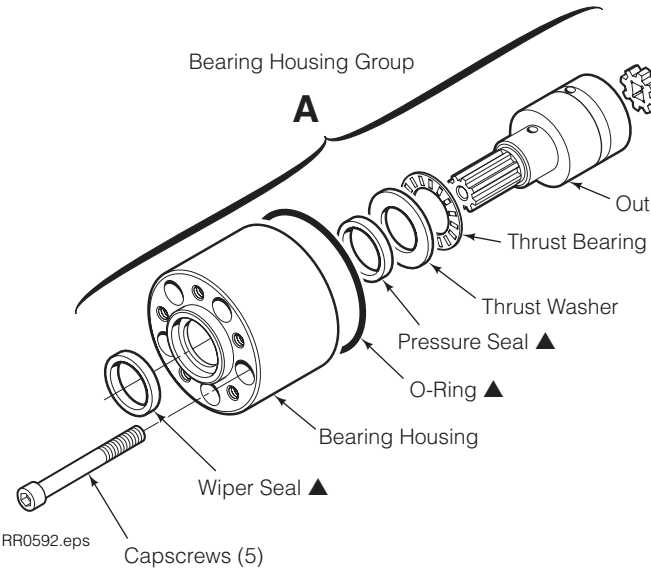


▲ Replacement parts available through Cascade

7 Remove wiper seal and pressure seal from the bearing housing using a seal removal tool or modified screwdriver as shown.

**IMPORTANT:** Note the direction of the seals and thickness.

**CAUTION:** Do not scratch either of the seal cavities.

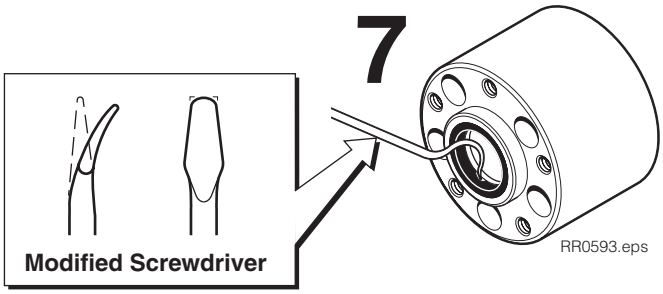


## 5.4-3 Drive Motor Inspection

- Clean all parts with solvent and blow dry. **Do not use paper or cloth towels.**
- Inspect all parts for small nicks or burrs. Remove any small nicks or burrs with emery cloth.
- Inspect the bearing housing seal seats for scratches. Check for cracks that could cause leakage.

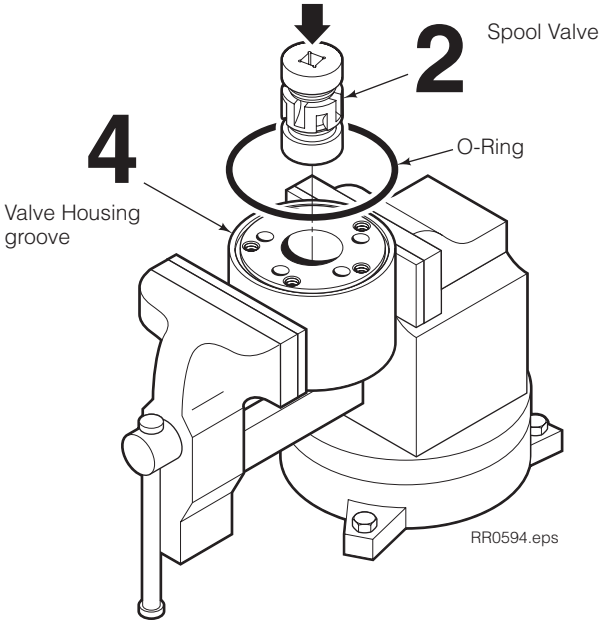


## 5.4-4 Drive Motor Reassembly

**IMPORTANT:** Use new seals for reassembly. Lubricate new seals with petroleum jelly to help hold seals in place when installed.

1 Clamp valve housing with fittings facing down.

2 Slide spool valve into the valve housing.

3 Place spool drive into the seating area of the spool valve.

4 Lubricate O-ring and install into the groove of the valve housing.

5 Lubricate O-ring and install into the groove of the geroler set. Place geroler set on valve housing while aligning the scribe mark and screw holes.

6 Align the corners of the spool drive corner to the star points as shown. Install the drive.

7 Lubricate O-ring and install into the groove of the spacer. Place the spacer on the Geroler while aligning to the scribe marks and screw holes.

**CAUTION:** Be sure to not move the Geroler.

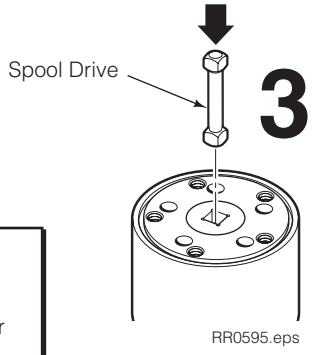


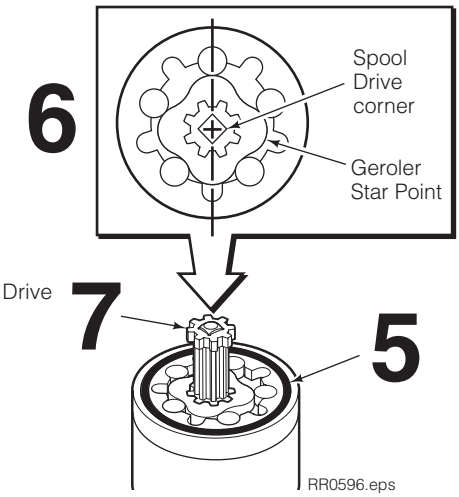

**8** Apply a coating of a lithium based bearing grease, such as Mobilith SCH220, to inner edges of wiper seal, pressure seal, thrust bearing and washer.

**9** Install wiper seal with the u-shape facing outward from its seat. Press the wiper seal firmly into its seat.

**CAUTION:** Do not damage seal. If seal is damaged during installation, it must be replaced.

**10** Install pressure seal with the u-shape facing outward from its seat. Press the pressure seal firmly into it seat. If needed, us a 1 in. (25 mm) diameter dowel to press the seal.

**CAUTION:** Do no damage seal. If seal is damaged during installation, it must be replaced.

**11** Place the output shaft onto the spool drive. Rock the shaft around until the spool drive engages into the output shaft spacer.

**12** Install the bearing housing onto the output shaft while aligning the scribe marks and screw holes.

**CAUTION:** Do not damage seal. If seal is damaged during installation, it must be replaced.

**13** Install the five capscrews by pre-torquing them in an alternating cross pattern to 90 in.-lbs. (10 Nm). Final torque in an alternating cross pattern to 130 in.-lbs, (15 Nm).

**14** Lubricate the flange o-ring with petroleum jelly and press into flange. Place flange on the shaft and flush against the housing. Install caspcrews and tighten to a torque of 115 in.-lbs. (13 Nm).

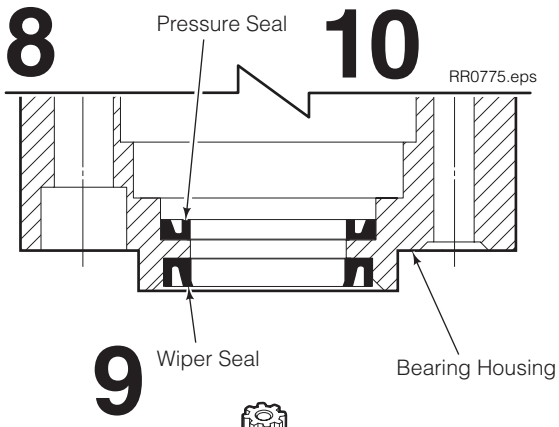


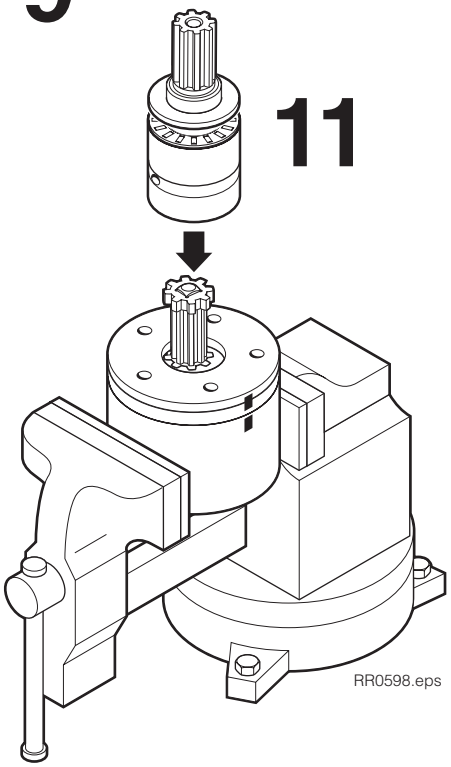


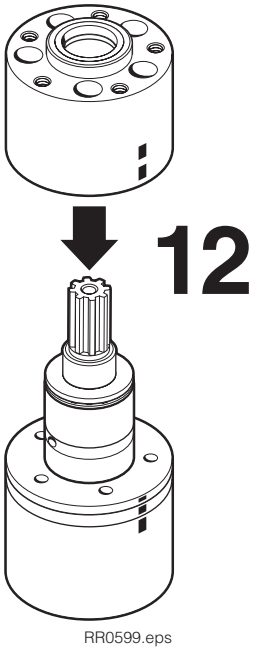


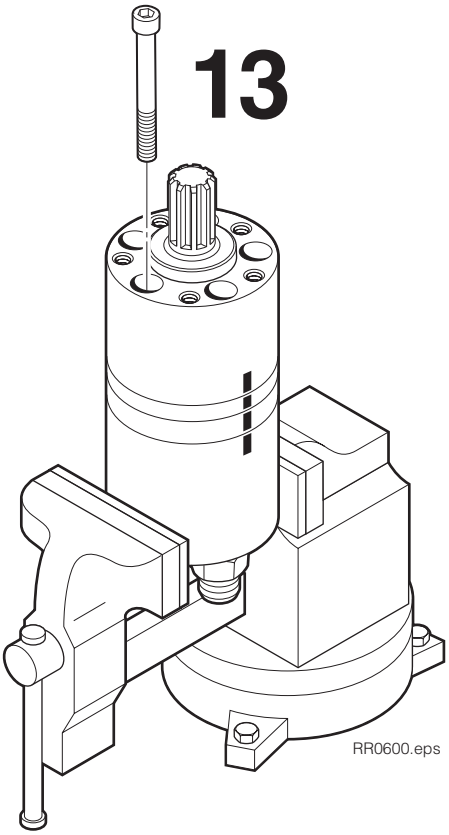


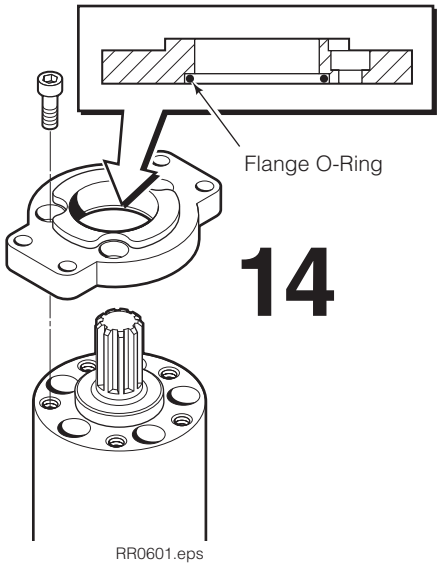

# 5.5 Valve

## 5.5-1 Valve Removal

**WARNING**: Before removing hydraulic lines, relieve pressure in the attachment hydraulic system. Turn the truck off and move the auxiliary control valves several times in both directions.

1. Disconnect the hydraulic hoses to the drive group valve. Tag hoses for reassembly.
2. Disconnect the tubes to the drive box and valve. Tag for reassembly.
3. Remove the two capscrews fastening the valve to the Rotator baseplate. For reassembly, tighten the capscrews to 6 ft.-lbs. (8 Nm).

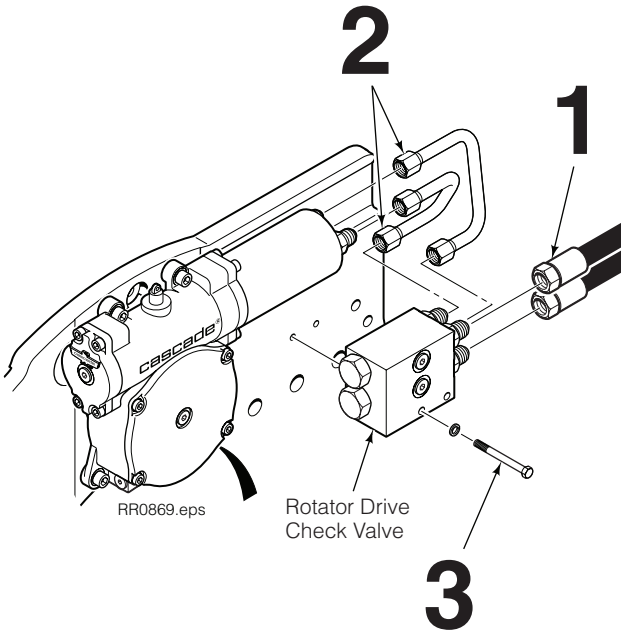


## 5.5-2 Valve Service

1. Remove cartridges from valve.
2. Remove the remaining fittings
3. Remove the O-rings and back-up rings from the cartridges.
4. Clean all parts with cleaning solvent.
5. For reassembly, reverse the above procedures except for the following special instructions:
   - The cartridge O-rings and back-up rings must be installed as shown for proper hydraulic operation.
   - Lubricate the cartridges and seals with petroleum jelly prior to reassembly.

**Basic Valve - 6039467**

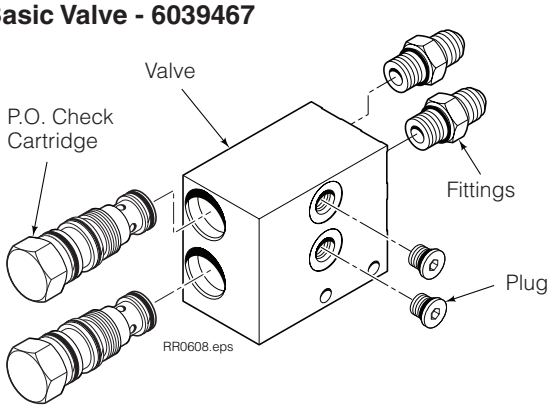


**P.O. Check Cartridge**

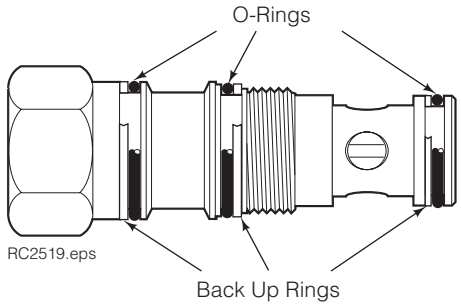

# 5.6 Revolving Connection

## 5.6-1 Revolving Connection Removal and Installation

**WARNING**: Before removing any hydraulic lines, relieve pressure in the hydraulic system. Turn the truck off and open the truck auxiliary control valves several times in both directions.

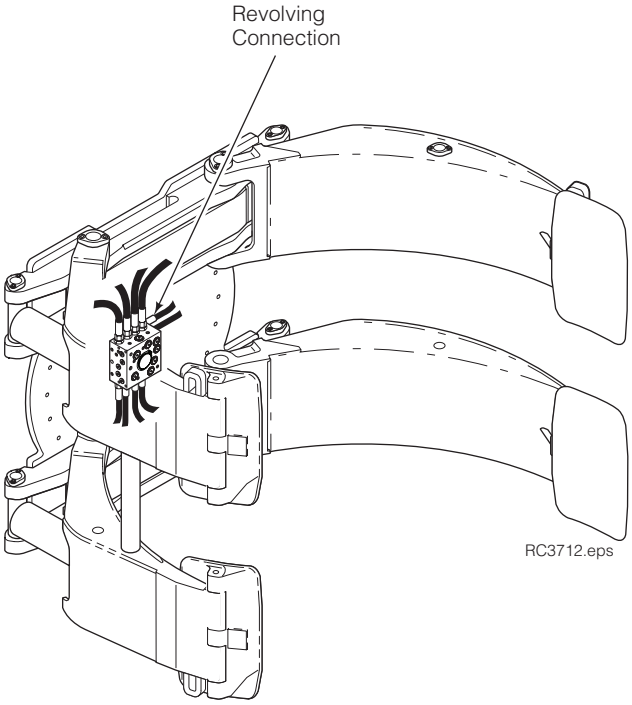


1. Remove the attachment from the lift truck as described in Section 5.1.
2. Disconnect the hoses from the front and rear of the revolving connection. Tag for reassembly.
3. Remove the capscrews fastening the end block plate to the baseplate. For reassembly, tighten the capscrew to 30 ft.-lbs. (40 Nm).
4. Remove the capscrews fastening the revolving connection to the faceplate. For reassembly, tighten the capscrews to 30 ft.-lbs. (40 Nm).
5. Remove the revolving connection from the faceplate.
6. For reassembly, reverse the above procedures except as follows:
   - Position the revolving connection on the faceplate where the stamps 'SHORT ARM' and 'LONG ARM' are facing the appropriate arms.
   - Position the end block/shaft assembly so that the stamping 'CLAMP' is on top.
   - Service the revolving connection in a clean work area.

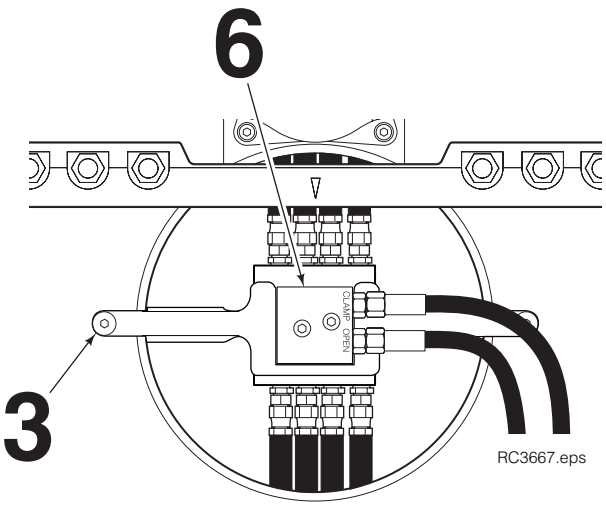


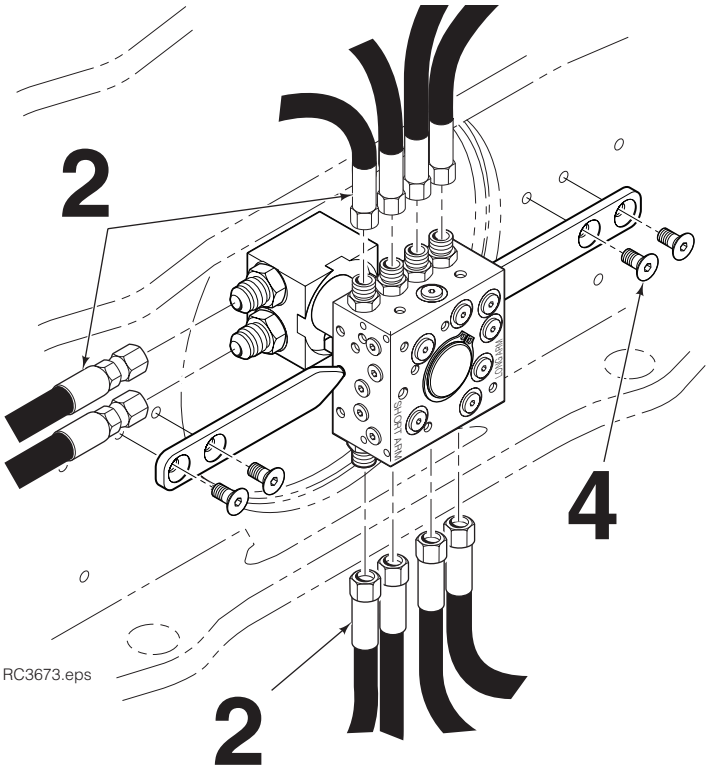

## 5.6-2 Revolving Connection Service

**1** Remove the revolving connection from the attachment as described in Section 5.6-1.

**2** Remove the front snap ring from the revolving connection shaft.

**CAUTION:** Remove all burrs and paint from the exposed shaft surface prior to removal from the body. **Burrs or paint chips pulled through the bore may permanently damage the valve body.**

**3** Remove the shaft from the body.

**4** Remove the end block from the shaft. For reassembly, tighten capscrews to 15 ft.-lbs. (20 Nm).

**5** Remove the two-piece seals from the revolving connection body using brass hook-type tools (Cascade Part No. 674424).

**NOTE:** Do not scratch or damage the grooved surfaces.

**6** Clean all parts with clean solvent and inspect the following areas:

- Check the sealing surface of the shaft for minor surface imperfections. Remove with 320-grit emery paper. Sand the shaft radially (around), not along the length. Break the edges on the outer end of the shaft and the snap ring grooves with 320-grit emery paper. If severely worn, replace the shaft.
- Check the seal grooves in the body for sharp nicks or projections. Remove minor imperfections with 320-grit emery paper. If severely worn, replace the body.

**7** For reassembly, reverse the previous procedures with the following exceptions:

- Clean all traces of oil and moisture from the 2-piece seal grooves inside the revolving connection body using a non-petroleum based cleaner. (Example: electronic contact cleaner)
- Clean hands thoroughly to remove all traces of oil and moisture prior to 2-piece seal installation.
- A) Install the square rubber rings into the revolving connection body grooves.

  B) Install the Teflon rings on top of the rubber rings.

  **IMPORTANT:** Form the seals into a 'kidney' shape as shown to install. Avoid sharp bends. Press the seals into the grooves using finger pressure.
- Lubricate the shaft and body with hydraulic fluid prior to reassembly.
- Use seal/shaft loader and apply gentle pressure to install shaft in body. Rotate body to ease installation.
- Install new O-rings and back-up rings on the cartridges (if equipped) as shown.

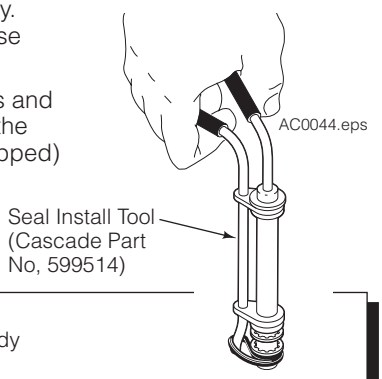


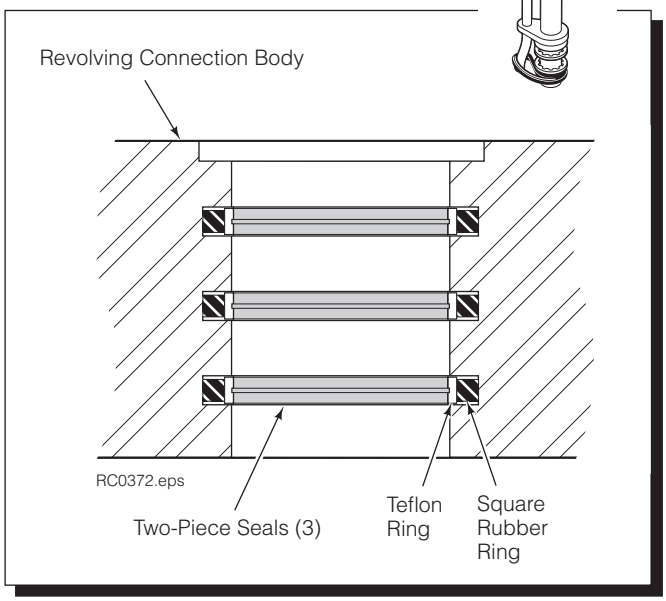


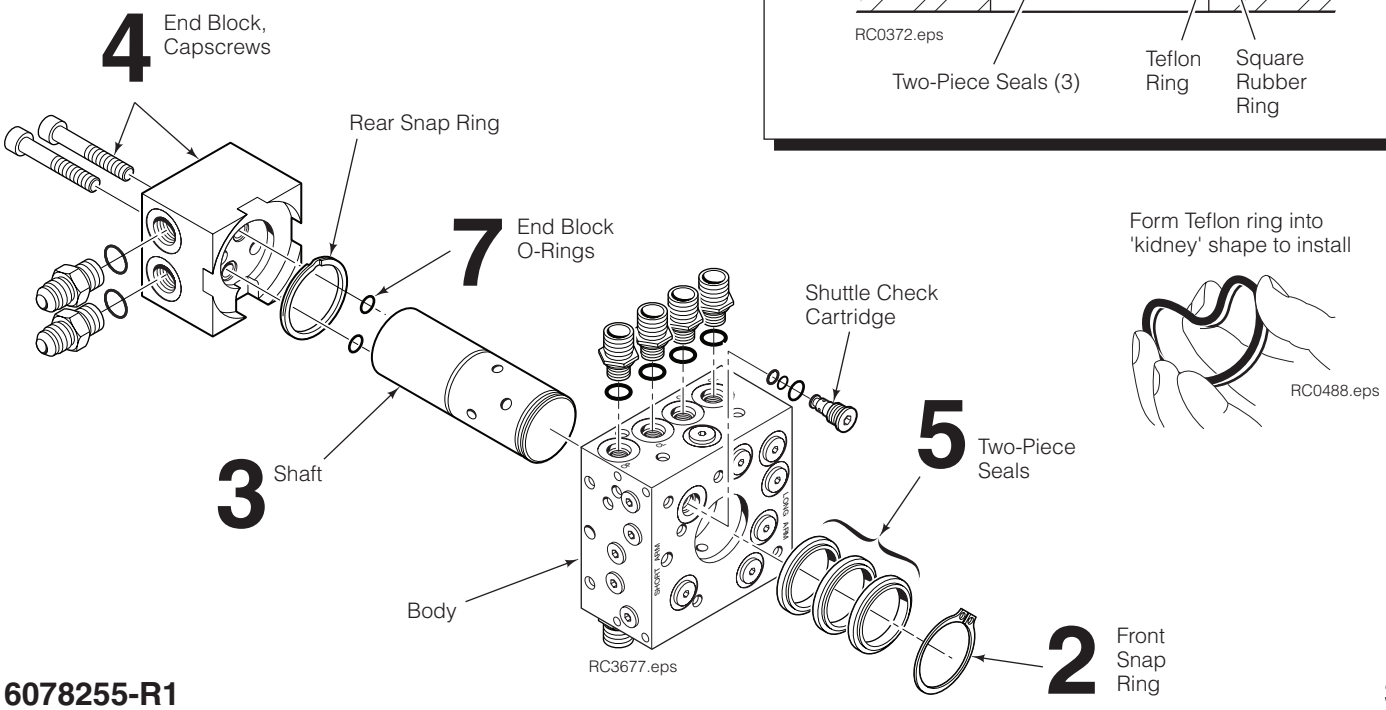

# 5.7 Cylinders

## 5.7-1 Servicing Cylinders on the Clamp

1 Close the arm attached to the cylinder being serviced. Rotate the attachment to the vertical roll handling position.

2 Remove the cylinder rod anchor pins from both cylinders.

3 Retract the cylinder rods. Swing the cylinder to be serviced outward to expose the cylinder rod and retainer.

> **WARNING**: Before servicing hydraulic components, relieve pressure in the hydraulic system. Turn the truck off and open the truck auxiliary control valves several times in both directions.

4 Place a drip pan under the cylinder and disconnect the hoses from the cylinders ports. Plug the hose ends and tag for reassembly.

5 Service the cylinder as described in Section 5.8.

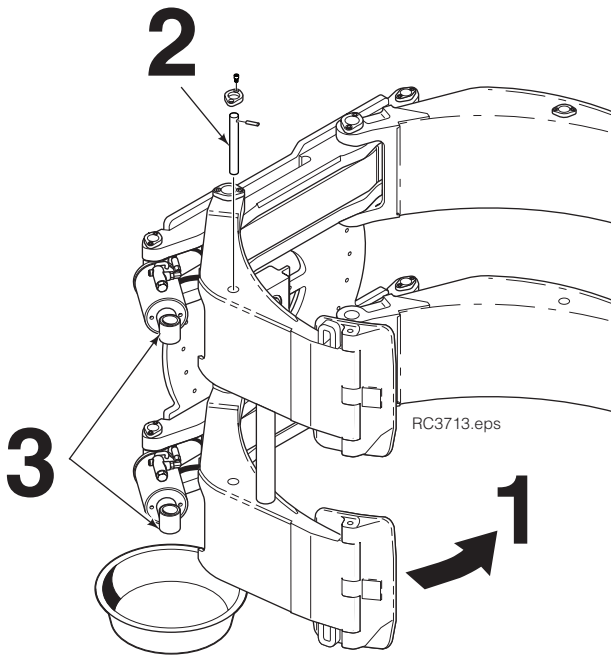


## 5.7-2 Cylinder Removal, Long or Short Arm

1 Position the arm attached to the cylinder being removed to mid-range. Rotate the attachment to the vertical roll handling position.

2 Remove the cylinder rod anchor pin from the cylinder to be removed.

3 Swing the arm inward.

> **WARNING**: Before removing hydraulic hoses, relieve pressure in the hydraulic system. Turn the truck off and open the truck auxiliary control valves several times in both directions.

4 Place a drip pan under the cylinder. Disconnect the hoses from the cylinder ports. Plug the hose ends and tag for reassembly.

5 Remove the cylinder base anchor pin. Note location of shims. For reassembly, tighten the anchor pin retainer capscrews to 14 ft.-lbs. (19 Nm).

6 Service the cylinder as described in Section 5.8.

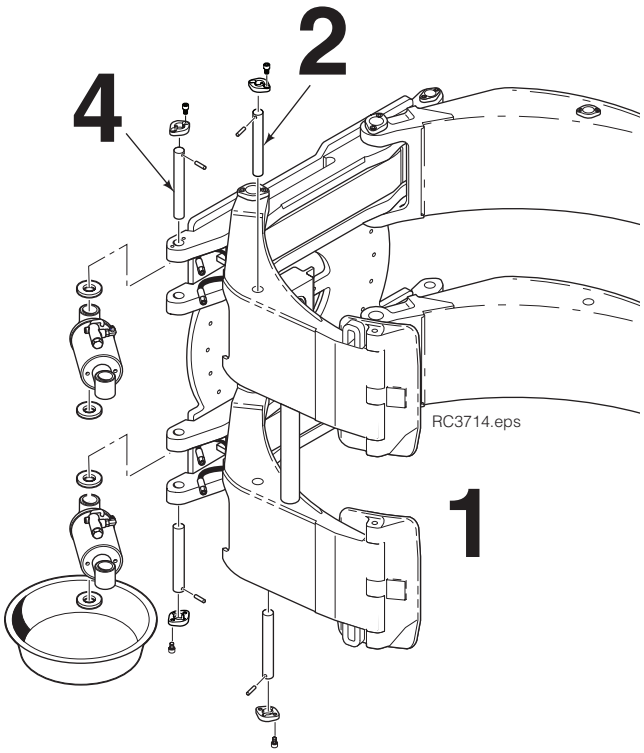

## 5.7-3 Cylinder Check Valve Service

**1** Rotate the attachment to the vertical roll handling position. Close the arm attached to the cylinder being serviced to gain access to the cylinder check valve.

> **WARNING**: Before removing hydraulic lines, relieve pressure in the hydraulic system. Turn the truck off and open the truck auxiliary control valves several times in both directions.

**2** Remove the check valve cartridge from the cylinder port.

**3** Remove the O-rings and back-up rings. Clean the check valve cartridge with kerosene or solvent.

**4** Install new O-rings and back-up rings as shown.

**5** Lubricate the check valve cartridge with STP or petroleum jelly prior to reassembly. Tighten the check valve cartridge to 35 ft.-lbs. (50 Nm).

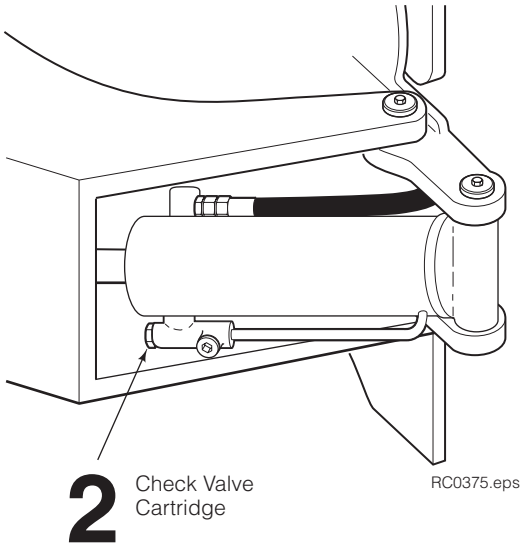


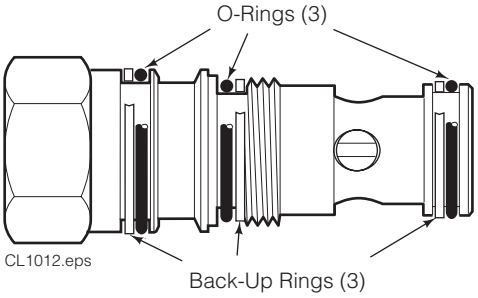


**Check Valve Cartridge**

## 5.7-4 Cylinder Bushing Service

**NOTE:** Bushings require replacement if bushing-to-pin clearance exceeds 1/16 in. (1.6 mm).

1. Remove the cylinder from the clamp as described in section 5.7-2.
2. Remove the bushings from the cylinder using a bushing driver.

   **NOTE:** Bushing drivers can be machined using the dimensions shown below.
3. Install new bushings in the cylinder. Replace with the same number of bushings removed.

   **CAUTION:** Bushings may be damaged if installed without a proper bushing driver.

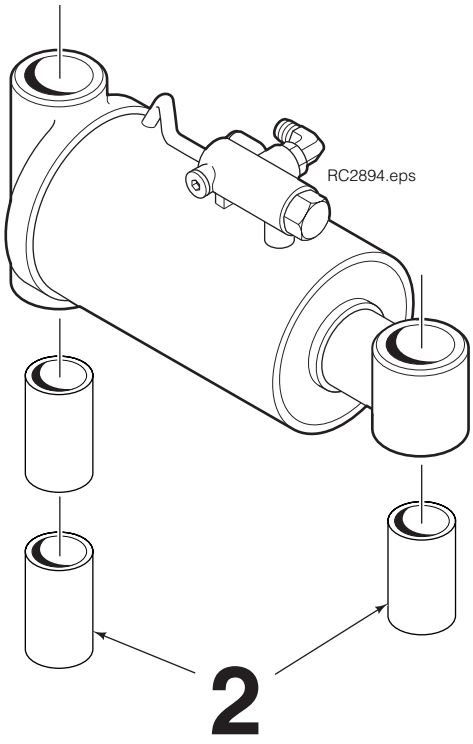


**Bushing Driver Dimensions**

| | A<br>Bearing I.D. | B<br>Driver O.D. |
|---|---|---|
| **18H** | 1.18 in<br>(30.0 mm) | 1.37 in.<br>(35.0 mm) |

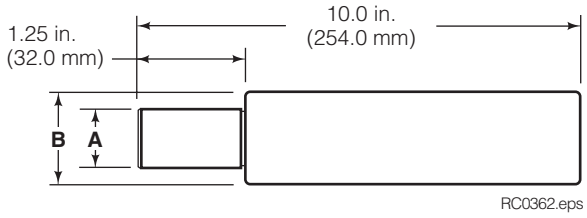

# 5.8 Cylinder Service

## 5.8-1 Cylinder Disassembly

**1** Clamp the cylinder so that the vise jaws contact only the extreme end of the cylinder base.

**NOTE:** Use a soft-jawed vise for all cylinder disassembly and assembly procedures.

**2** Remove the cylinder retainer by unscrewing it with a pin-type spanner wrench.

**3** Remove the piston/rod/retainer as an assembly from the cylinder shell.

**4** Clamp the piston/rod/retainer assembly across the rod end. **Never clamp directly on the rod sealing surface.**

**5** Remove the piston nut from the rod.

**6** Clamp the piston on the top and bottom in a soft-jawed vise. Pry seals up with a dental tool and cut to remove.

**CAUTION:** Do not scratch the seal grooves.

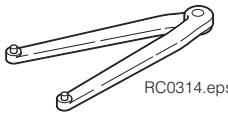


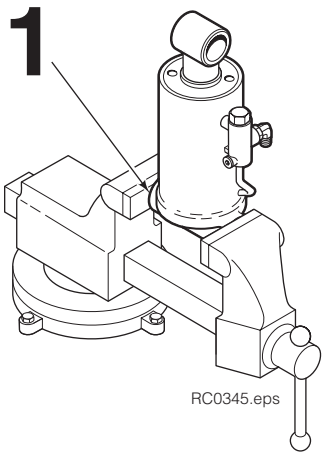


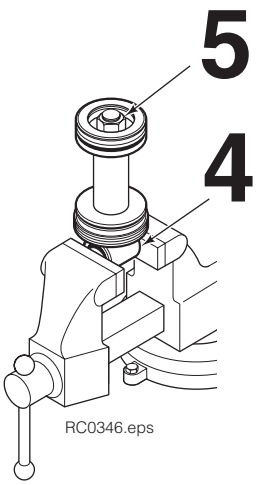


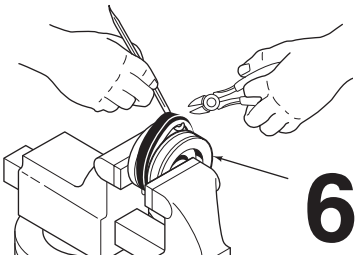


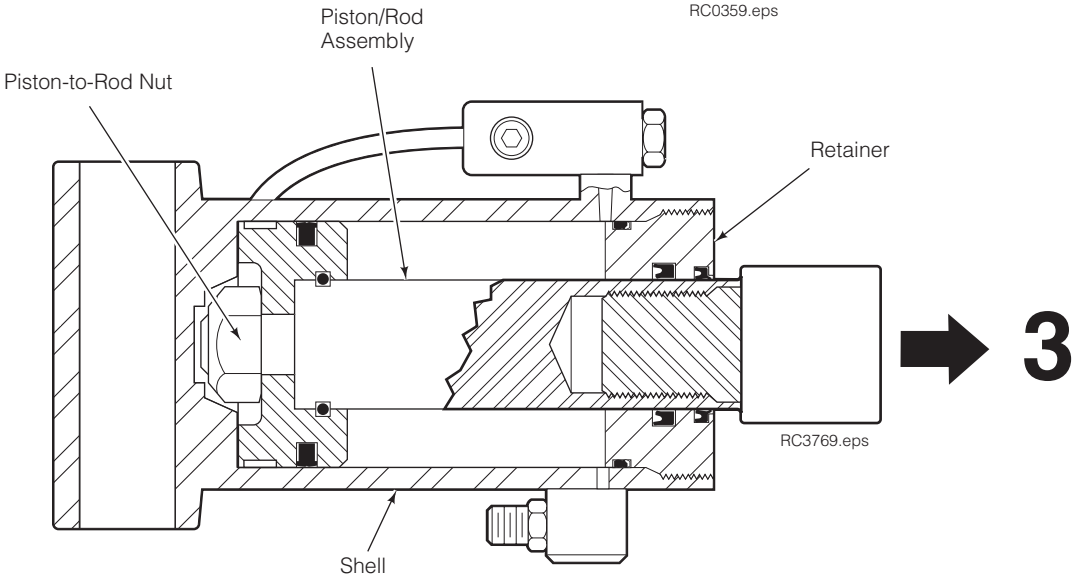


## 5.8-2 Cylinder Inspection

- Inspect the rod, piston and retainer for nicks or burrs. Minor nicks or burrs may be removed with emery cloth. If they cannot be removed, replace the part.
- Inspect the cylinder shell bore and remove any minor nicks or burrs with a butterfly. If the nicks or burrs cannot be removed, replaced the part.
- Inspect the outside of the shell for any deformities or cuts that could impare performance or cause leaks under pressure. If necessary, replace the part.

## 5.8-3 Cylinder Reassembly

1. Lubricate all new seals and O-rings with petroleum jelly.
2. Note the direction of the U-cup seals. Pressure seals must always be installed with the lip toward the high pressure side of the cylinder.
3. Polish the piston and retainer chamfer angle with emery cloth to facilitate seal installation.
4. Install new seals on the piston and retainer. Hook one side of the seal in the groove and carefully work it over the piston or retainer as shown.
5. Install the retainer and then the piston on the cylinder rod. Tighten the piston retaining nut to a torque of 330 ft.-lbs. (445 Nm).
6. Place the piston loader furnished with the seal kit into the cylinder shell. Check that the loader covers all the cylinder shell threads but does not contact the thread relief chamfer. Trim the loader stop fins if more engagement is needed.

   **CAUTION:** The piston will not enter the cylinder shell properly if the loader contacts the thread relief chamfer.
7. Apply a thick film of petroleum jelly to the inside of the cylinder shell, piston loader and piston seals.
8. Using a rubber mallet, tap the piston/rod assembly through the loader into the cylinder shell.
9. Remove the loader by cutting down one side and pulling it out of the cylinder bore.
10. Apply a thick film of petroleum jelly to the inside of the cylinder shell, and to the retainer and seal.
11. Screw the retainer into the cylinder shell. Tighten the retainer to a torque of 400 ft.-lbs. (540 Nm).

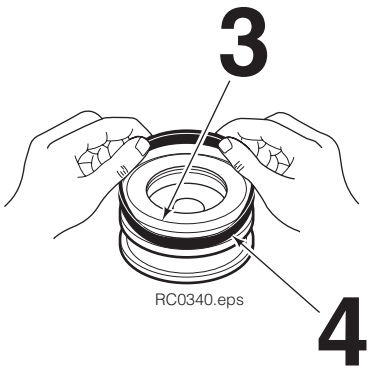


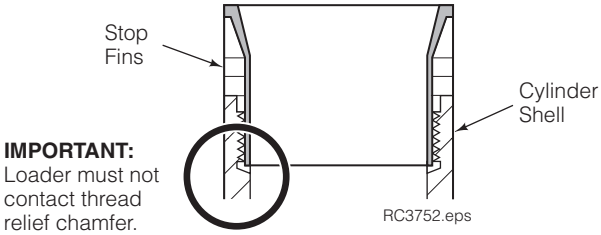


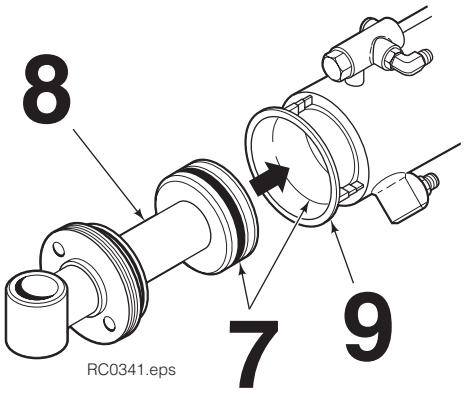


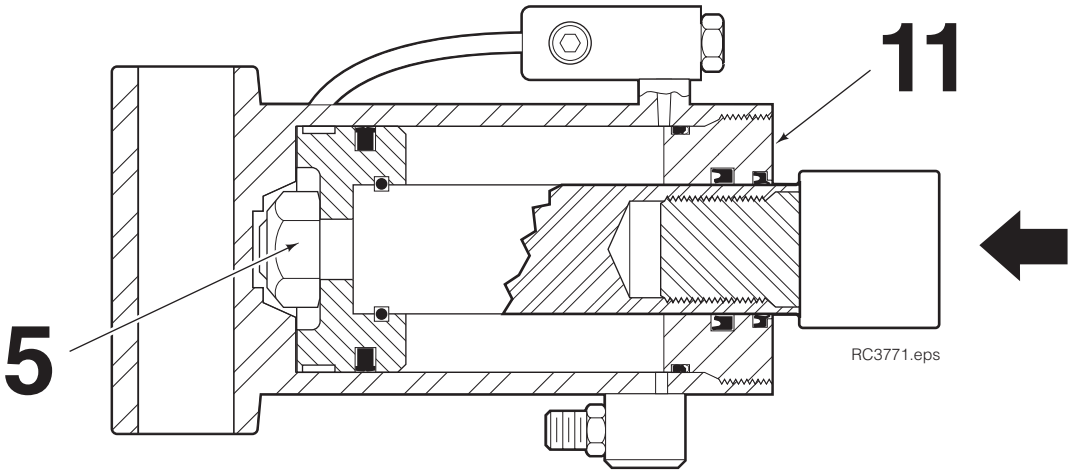

# 5.9 Base Unit

## 5.9-1 Frame Bushing Service

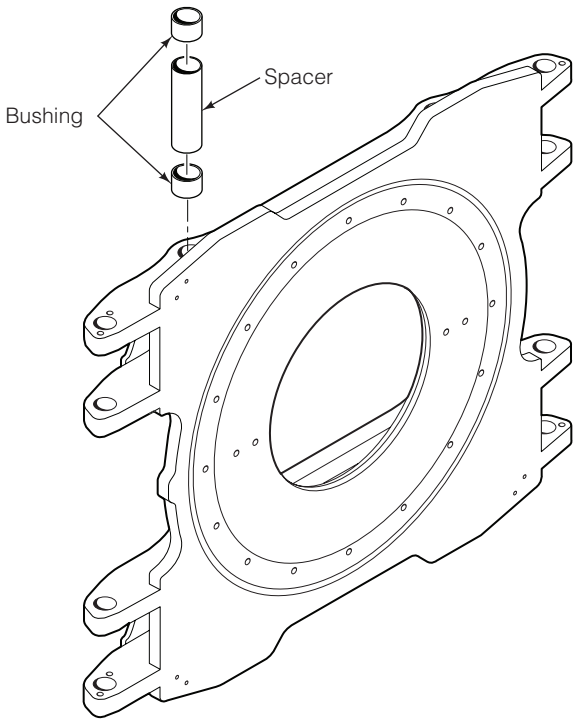


RC3681.eps

1. Remove the arms from the attachment as described in Section 5.2-1.
2. Remove the arm pivot bushings (8) from the frame using a bushing driver.

   **NOTE:** Bushing drivers can be machined using the dimensions shown in the chart below.
3. For reassembly, reverse the above procedures with the following exceptions:
   - Install new arm pivot bushings and spacer.

   **CAUTION:** Bushings may be damaged if installed without a proper bushing driver.

**Bushing Driver Dimensions**

| | A<br>Bearing I.D. | B<br>Driver O.D. |
|---|---|---|
| **18H** | 1.18 in<br>(30.0 mm) | 1.37 in.<br>(35.0 mm) |

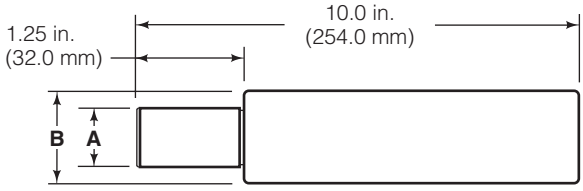


RC0362.eps

# 5.9-2 Rotation Bearing Assembly – Capscrew Torque Inspection

## 500-Hour Inspection

Every 500 hours perform the following inspection:

**1** Check the accessible baseplate capscrews above upper mounting hooks for an initial torque of 38 ft.-lbs. (52 Nm). Tighten capscrews to 10 ft.-lbs. (14 Nm) above initial torque. Mark each capscrew after checking.

- If any baseplate capscrews are loose, rotate or broken, replace all baseplate fasteners as described in Section 5.9-3.
- If capscrews do not rotate, continue with faceplate capscrew inspection in Step 2.

**2** Remove the access plug from the back of the baseplate and rotate the Clamp to the vertical roll handling position. Check three (3) capscrews closest to the access hole for an initial torque of 47 ft.-lbs. (63 Nm). Tighten capscrews 10 ft-lbs. (14 Nm) above initial torque. Mark each capscrew after checking.

- If any faceplate capscrews are loose, rotate or broken, replace all faceplate fasteners as described in Section 5.9-3.
- If capscrews do not rotate, inspection is complete.

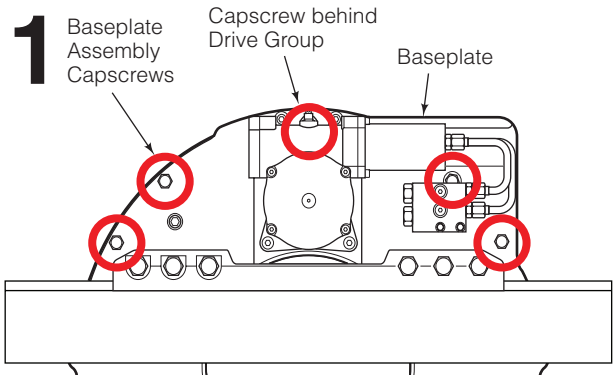


RC3684.eps

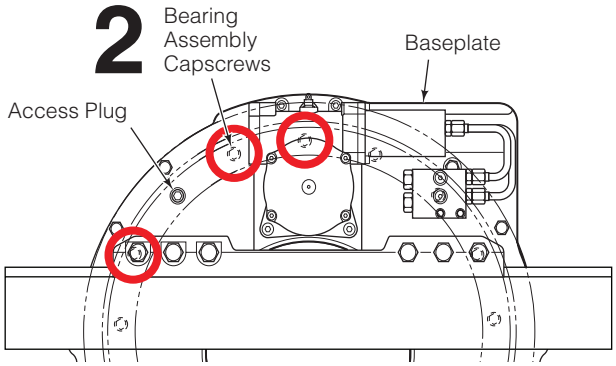


RR3685.eps

## 2000-Hour Inspection

Every 2000 hours perform the following inspection:

**1** Check **all** baseplate and faceplate capscrews and tighten until torque is 10 ft.-lbs. (14 Nm) above torque values listed above. Mark each capscrew after checking.

- If any capscrews are loose, rotate or broken, replace all capscrews as described in Section 5.9-3.
- If capscrews do not rotate, inspection is complete.

**NOTE:** The attachment must be removed from truck to provide access to all baseplate capscrews. Remove baseplate (shown) or use access hole to provide access to all faceplate capscrews (see Section 5.9-3).

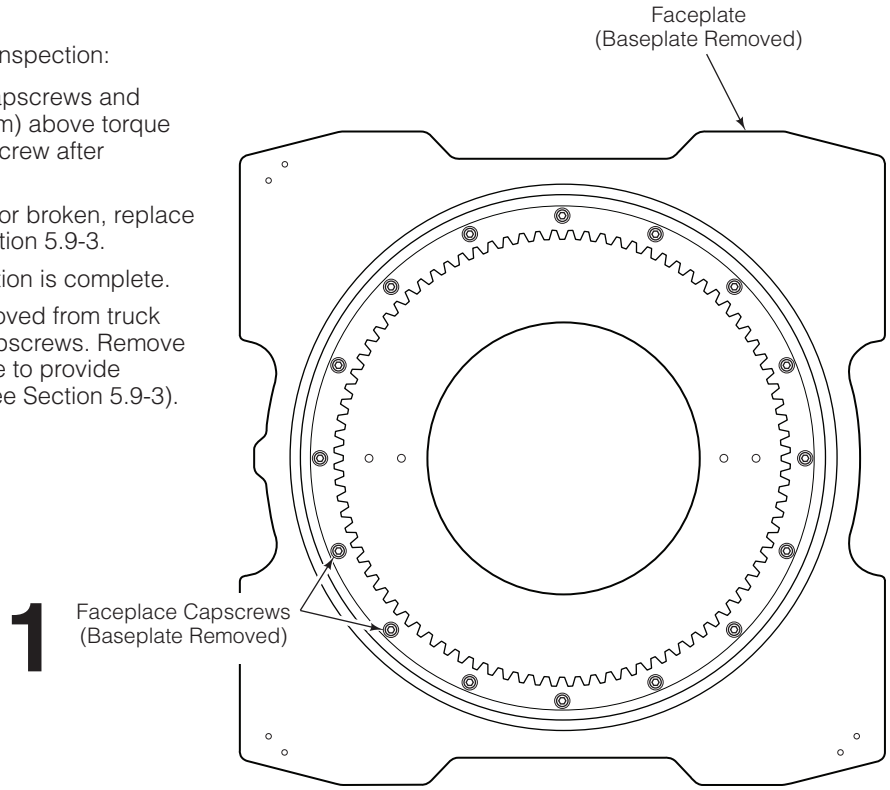


RC3686.eps

## 5.9-3 Rotation Bearing Assembly – Removal and Installation

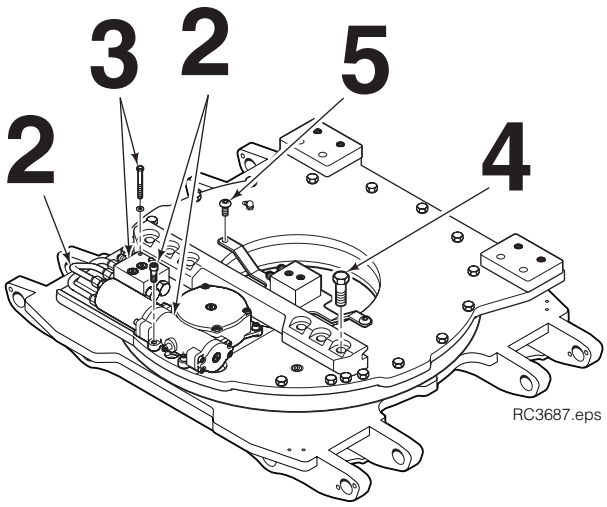


**1** Remove the attachment from the lift truck as described in Section 5.1.

**2** Remove the drive group as described in Section 5.3-1.

**3** Remove the valve assembly capscrews. For reassembly, tighten capscrews to 6 ft.-lbs. (8 Nm).

**4** Remove the upper mounting hook. For reassembly, tighten the capscrews to 122 ft.-lbs. (165 Nm),

**5** Remove the capscrews fastening the end block plate to the baseplate. For reassembly, tighten the capscrew to 30 ft.-lbs. (40 Nm).

**6** Remove the capscrews fastening the baseplate to the bearing assembly. For reassembly, tighten the capscrews using the following technique:

> **WARNING**: Install short capscrews in counterbored holes only. Use lockwashers if supplied in kit.

> **WARNING**: Check the attachment weight (located on the nameplate) to make sure the overhead hoist and chains or straps are at least the rated capacity of the attachment.

**Baseplate Capscrew Reassembly –**

**A)** Clean and dry capscrews. Apply Loctite 242 (Blue) to capscrew threads and threaded holes in the faceplate. Threads must be clean and dry for new Loctite to cure properly.

**B)** Tighten using the alternating cross-pattern shown to one-half the final torque value shown below.

**C)** Tighten using the alternating cross-pattern to the final torque value, then double-torque by backing off 1/2 turn and immediately retightening to a final torque of 38 ft.-lbs. (52 Nm).

**CAUTION:** Do not reuse old capscrews or washers. Use new hardware kit when installing a new bearing assembly.

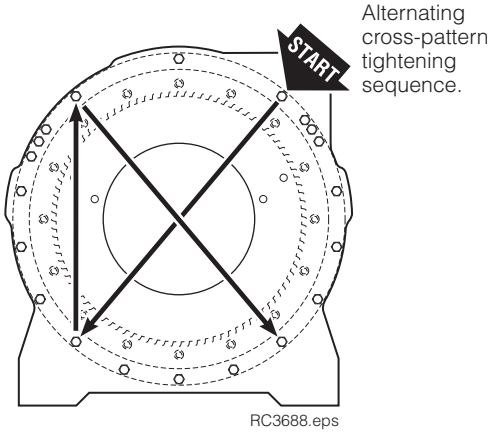


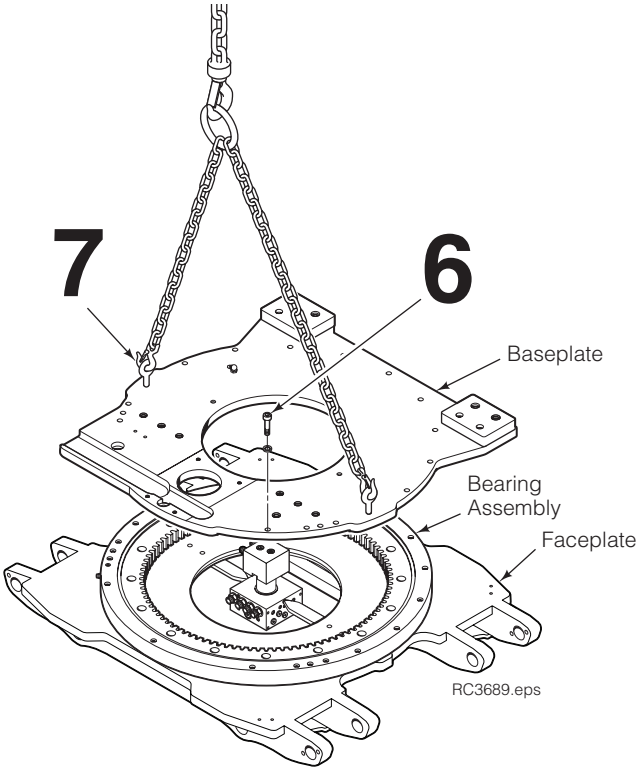


**7** Attach two eyebolts to the baseplate. Attach an overhead hoist and lift the baseplate away from the faceplate/bearing assembly.

# 5.9-3 Rotation Bearing Assembly – Removal and Installation (Continued)

**8** Remove the capscrews fastening the bearing assembly to the faceplate. For reassembly, tighten the capscrews using the following technique:

**Bearing Capscrew Reassembly –**

**A)** Clean and dry capscrews. Apply Loctite 242 (Blue) to capscrew threads and threaded holes in the faceplate. Threads must be clean and dry for new Loctite to cure properly.

**B)** Tighten using the alternating cross-pattern shown to one-half the final torque value below.

**C)** Tighten using the alternating cross-pattern to the final torque value, then double-torque by backing off 1/2 turn and immediately retightening to a final torque of 47 ft.-lbs. (63 Nm).

**CAUTION:** Do not reuse old capscrews or washers. Use new hardware kit when installing a new bearing assembly.

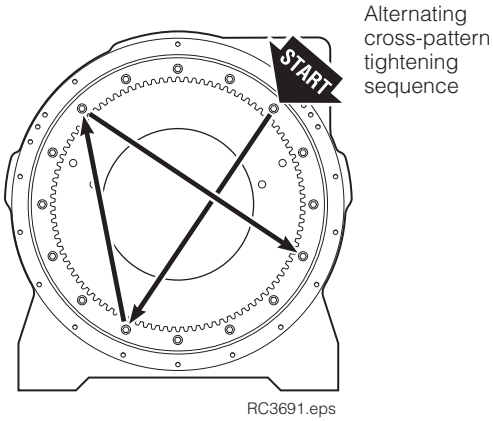


**9** Attach two eyebolts to the bearing assembly as shown. Attach an overhead hoist and lift the bearing assembly away from the faceplate.

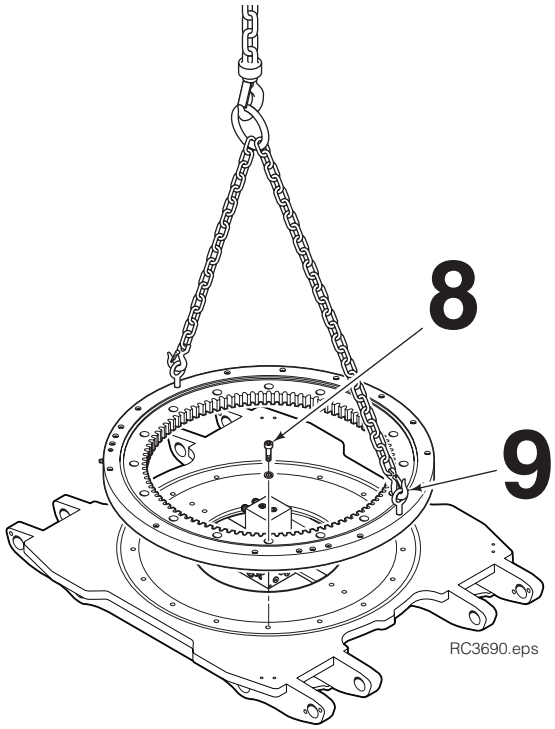


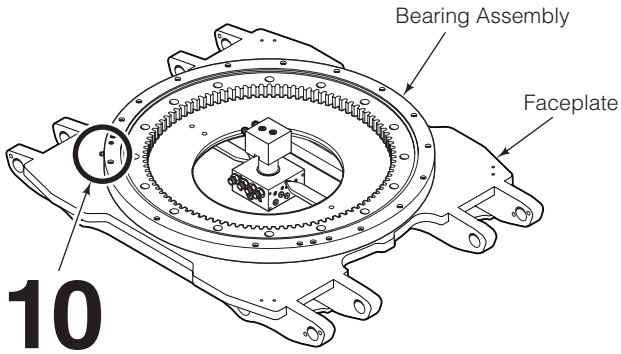


**10** For reassembly, reverse the above procedures with the following exceptions:

- When installing the rotation bearing assembly on the faceplate, align and position the heat-treated overlap zone 'R' on the ring gear with the outer race grease fitting 45° above horizontal as shown.
- Check the condition of the faceplate center hole seal. Replace if necessary. Attach seal to faceplate with 3M Scotch Grip 1300.
- Apply NLGI No. 0 grease to the teeth of the bearing assembly ring gear.
- After remounting the Clamp, apply chassis grease to the bearing assembly grease fitting. Rotate the Clamp slowly during the procedure.

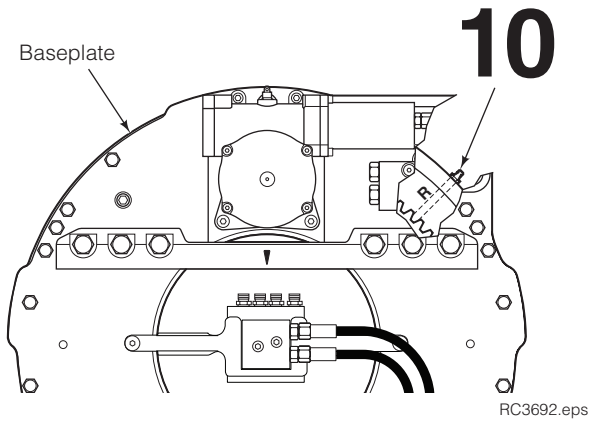

# 5.10 Solenoid Valve

## 5.10-1 Coil Service

1. Disconnect the wires and diode from the coil terminals.
2. Remove the end cover capscrews and remove the end cover and coil. Note the position of the coil terminals.
3. Install the new coil and end cover. Assure that the terminals are positioned correctly.
4. For reassembly, reverse the above procedures except as follows:
   - Refer to electrical schematic in below for correct wire and diode installation.

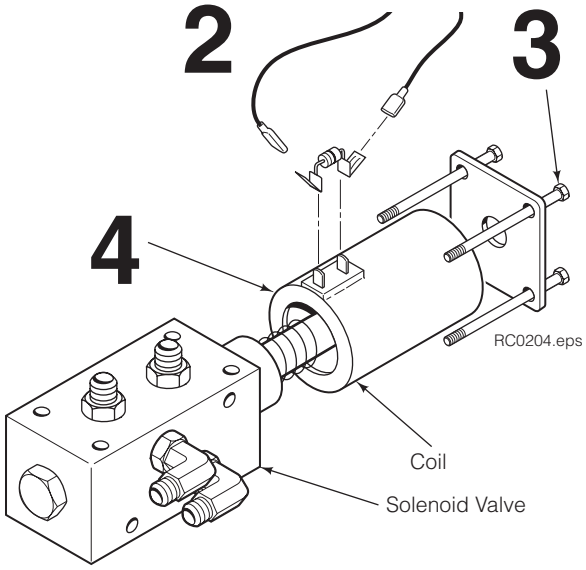


## 5.10-2 Valve Service

- Check the plunger within the valve body for freedom of movement. Press end button on coil to assure that valve is not jammed or damaged. If problems are found, replace solenoid valve as a complete assembly.

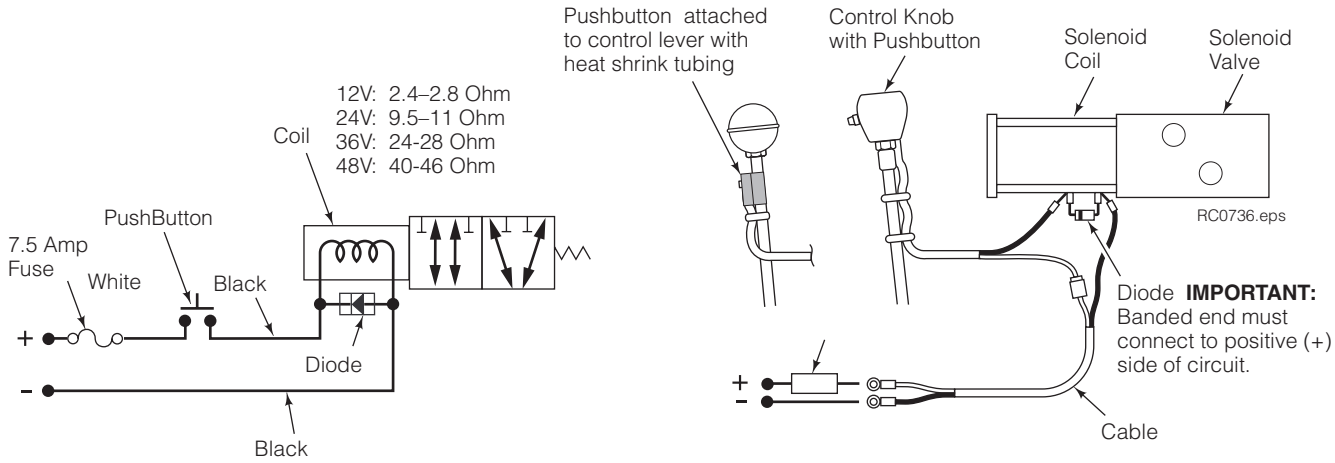

# 6.1 Specifications

## 6.1-1 Hydraulics

### Truck Relief Setting

2300 psi (160 bar) Maximum

### Truck Flow Volume ①

| | Min. ② | Recommended | Max. ③ |
|---|---|---|---|
| **18H** | 5 GPM (18 L/min.) | 7.5 GPM (28 L/min.) | 10 GPM (37 L/min.) |

① Cascade 18H Roll Clamps are compatible with SAE 10W petroleum base hydraulic fluid meeting Mil. Spec. MIL-0-5606 or MIL-0-2104B. Use of synthetic or aqueous base hydraulic fluid is not recommended. If fire resistant hydraulic fluid is required, special seals must be used. Contact Cascade.

② Flow less than recommended will result in a rotate speed less than 3 RPM.

③ Flow greater than maximum can result in excessive heating, reduced system performance and short hydraulic system life.

### Hoses and Fittings

All supply hoses should be No. 6

All fittings should have a minimum orifice size of 9/32 in. (7 mm)

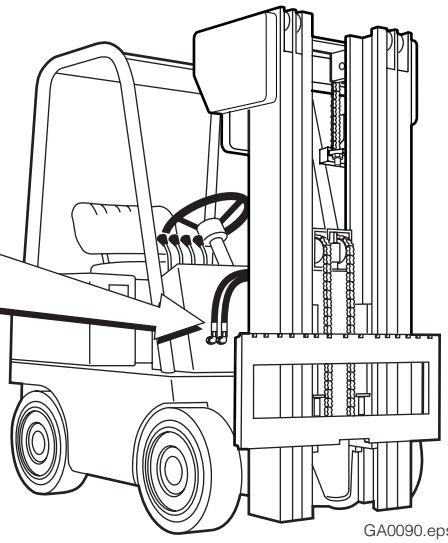

GA0090.eps

## 6.1-2 Auxiliary Valve Functions

Check for compliance with ISO standards:

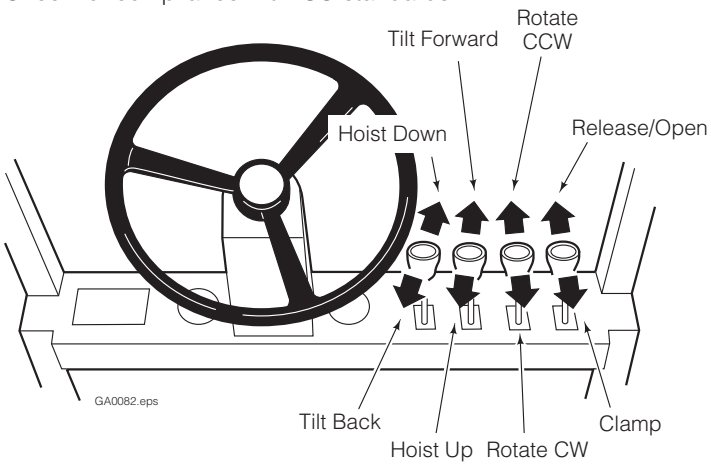


GA0082.eps

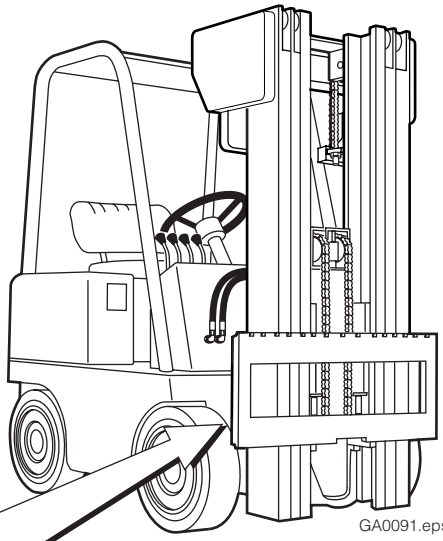

GA0091.eps

## 6.1-3 Truck Carriage


GA0028.eps

**Carriage Mount Dimension (A)** ITA (ISO)

| | Minimum | Maximum |
|---|---|---|
| **Class II** | 14.94 in. (380.0 mm) | 15.00 in. (381.0 mm) |

## 6.1-4 Torque Values

Fastener torque values for the 18H Roll Clamps are shown in the table below in both U.S. and Metric units. All torque values are also called out in each specific service procedure throughout this manual

**NOTE:** All fasteners have a torque value range of ±10% of stated value.

| Ref. | Fastener Location | Size | ft.-lbs. | Nm |
|---|---|---|---|---|
| 1 | Bearing Hex Socket Capscrew | M10 | 47 | 63 ● |
| 2 | End Cover Capscrew | M6 | 115 in.-lbs. | 13 ● |
| 3 | Drive Group Capscrew | M8 | 25 | 32 |
| 4 | Housing Cover Plate Capscrew | M6 | 71 in.-lbs. | 8 ● |
| 5 | Motor Flange/Motor | M6 | 115 in.-lbs. | 13 ● |
| 6 | Motor Flange/ DG Housing Capscrew | M6 | 115 in.-lbs. | 13 ● |
| 7 | Valve Capscrew | M6 | 70 in.-lbs. | 8 ● |
| 8 | Upper Hook Capscrew | M16 | 122 | 165 ● |
| 9 | Bracket Capscrew | M10 | 30 | 40 |
| 10 | Baseplate Capscrew | M10 | 38 | 52 ● |
| 11 | Lower Hook Capscrew | M16 | 122 | 165 |
| 12 | End Block Capscrew | M8 | 31 | 42 |
| 13 | Spacer Block Capscrew | M16 | 122 | 165 ● |
| 14 | Quick-Disconnect Hook Capscrew | M16 | 125 | 165 |
| 15 | Arm Retainer Capscrew | M10 | 28 | 38 |
| 16 | Rev. Conn. Support Capscrew | M10 | 30 | 40 |
| 17 | Spring Button Head Capscrew | M6 | 5 | 7 |

● Use Loctite 242 (Blue)

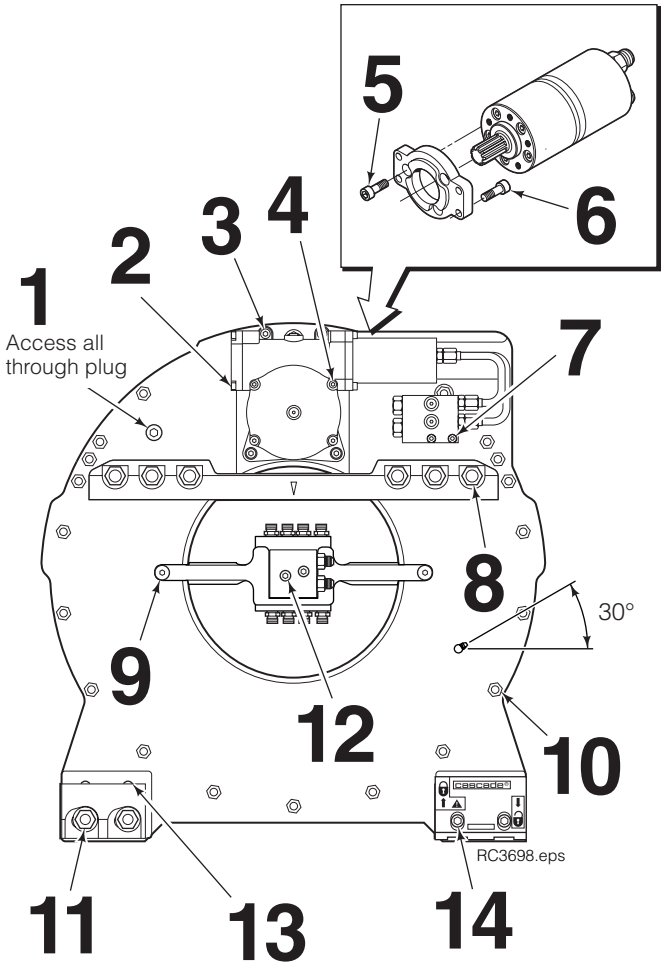


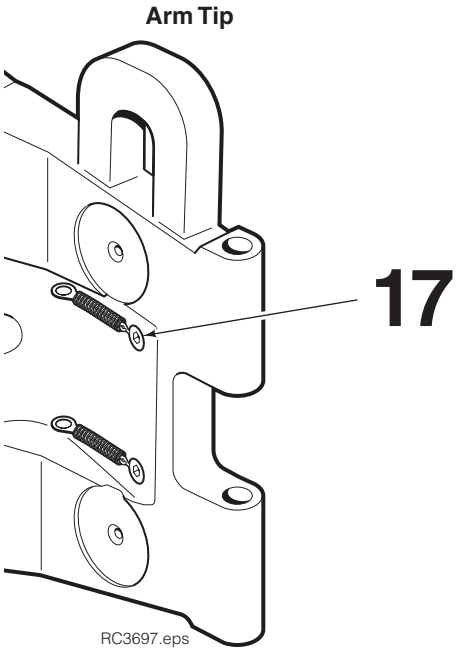


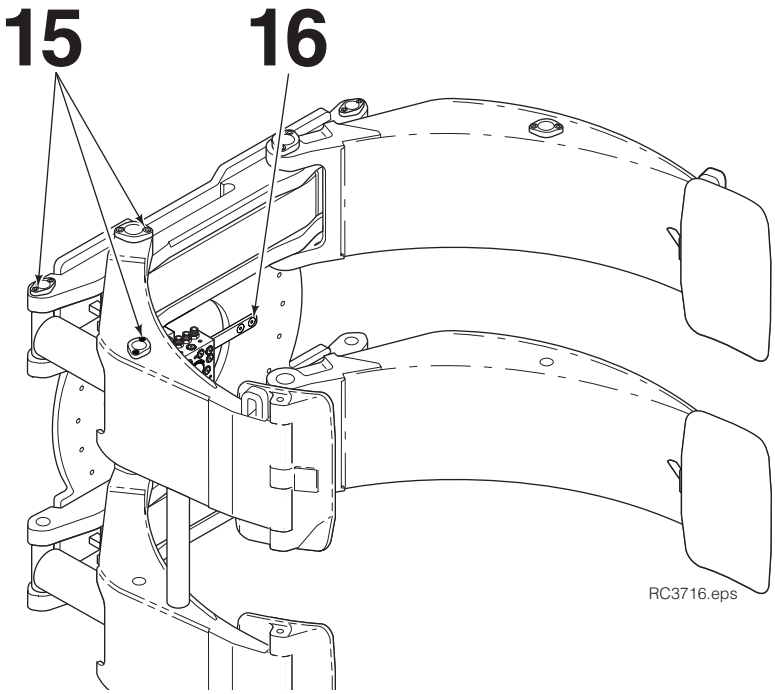

**Do you have questions you need answered right now?** Call your nearest Cascade Service Department.
Visit us online at www.cascorp.com

## *AMERICAS*

**Cascade Corporation**
**U.S. Headquarters**
2201 NE 201st
Fairview, OR 97024-9718
Tel: 800-CASCADE (227-2233)
Fax: 888-329-8207

**Cascade Canada Inc.**
5570 Timberlea Blvd.
Mississauga, Ontario
Canada L4W-4M6
Tel: 905-629-7777
Fax: 905-629-7785

**Cascade do Brasil**
Rua João Guerra, 134
Macuco, Santos - SP
Brasil 11015-130
Tel: 55-13-2105-8800
Fax: 55-13-2105-8899

## *EUROPE-AFRICA*

**Cascade Italia S.R.L.**
**European Headquarters**
Via Dell'Artigianato 1
37030 Vago di Lavagno (VR)
Italy
Tel: 39-045-8989111
Fax: 39-045-8989160

**Cascade (Africa) Pty. Ltd.**
PO Box 625, Isando 1600
60A Steel Road
Sparton, Kempton Park
South Africa
Tel: 27-11-975-9240
Fax: 27-11-394-1147

## *ASIA-PACIFIC*

**Cascade Japan Ltd.**
2-23, 2-Chome,
Kukuchi Nishimachi
Amagasaki, Hyogo
Japan, 661-0978
Tel: 81-6-6420-9771
Fax: 81-6-6420-9777

**Cascade Korea**
121B 9L Namdong Ind.
Complex, 691-8 Gojan-Dong
Namdong-Ku
Inchon, Korea
Tel: +82-32-821-2051
Fax: +82-32-821-2055

**Cascade-Xiamen**
No. 668 Yangguang Rd.
Xinyang Industrial Zone
Haicang, Xiamen City
Fujian Province
P.R. China 361026
Tel: 86-592-651-2500
Fax: 86-592-651-2571

**Cascade India Material Handling Private Limited**
No 34, Global Trade Centre
1/1 Rambaugh Colony
Lal Bahadur Shastri Road,
Navi Peth, Pune 411 030
(Maharashtra) India
Phone: +91 020 2432 5490
Fax: +91 020 2433 0881

**Cascade Australia Pty. Ltd.**
1445 Ipswich Road
Rocklea, QLD 4107
Australia
Tel: 1-800-227-223
Fax: +61 7 3373-7333

**Cascade New Zealand**
15 Ra Ora Drive
East Tamaki, Auckland
New Zealand
Tel: +64-9-273-9136
Fax: +64-9-273-9137

**Sunstream Industries Pte. Ltd.**
18 Tuas South Street 5
Singapore 637796
Tel: +65-6795-7555
Fax: +65-6863-1368

cascade™


06-2010
Part Number 6805681