INSTALLATION INSTRUCTIONS

and PERIODIC MAINTENANCE

H-Series

Swing Frame Paper Roll Clamps

Manual Number 6095756-R2

cascade® corporation

CONTENTS

INTRODUCTION

This manual provides installation instructions and periodic maintenance requirements for the Cascade H-Series Swing Frame Paper Roll Clamps.

In any communication about the attachment refer to the product catalog and serial numbers stamped on the nameplate. If the nameplate is missing, the numbers can be found stamped on the front of the faceplate top or side.

IMPORTANT: Supply input fittings are JIC.

NOTE: Specifications are shown in both US and (Metric) units. All fasteners have a torque value range of ±10% of stated value.

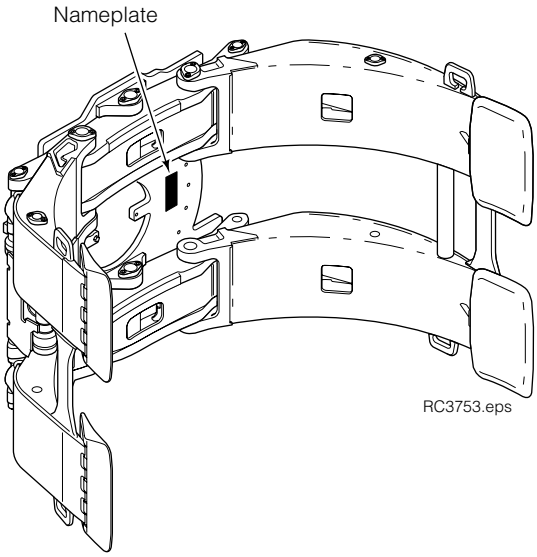

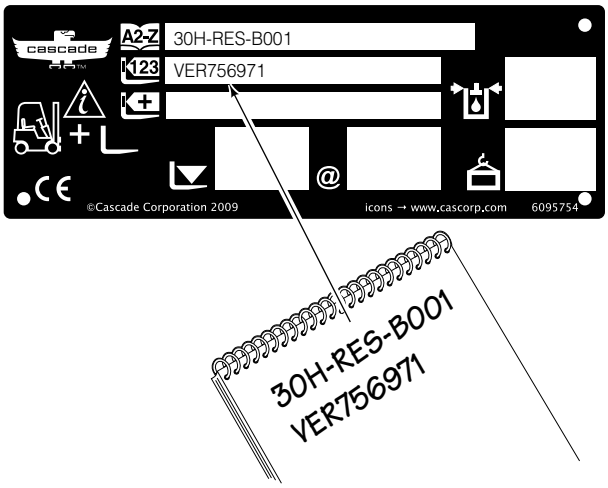

SPECIAL DEFINITIONS

The statements shown appear throughout this manual where special emphasis is required. Read all WARNINGS and CAUTIONS before proceedings with any work. Statements labeled IMPORTANT and NOTE are special information that is useful when servicing the attachment.

WARNING – A statement preceded by a WARNING is information that should be acted upon to prevent bodily injury. A WARNING is always inside a ruled box.

CAUTION – A statement preceded by CAUTION is information that should be acted upon to prevent machine damaged.

IMPORTANT – A statement preceded by IMPORTANT is information that possesses special significance.

NOTE – A statement preceded by NOTE is information that is handy to know and may make the job easier.

Weighted Emission Sound Pressure Level - Weighted emission sound pressure level (LρA) does not exceed 70 dB(A).

Measured Value of Whole Body Vibration - Measured value of whole body vibration (m/s^2) does not exceed 0,5 m/s^2.

Measured Value of Hand-Arm Vibration - Measured value of hand-arm vibration (m/s^2) does not exceed 2,5 m/s^2.

RECOMMENDED HYDRAULIC SUPPLY

H-Series Swing Frame Paper Roll Clamps will require one of the hydraulic arrangements shown. Refer to *Cascade Hose and Cable Reel Selection Guide*, Part No. 212199, to select the correct hose reel for the mast and truck. The hose and fitting requirements are:

- **Rotate Function –** Hoses and fittings should be No. 8 with 13/32 in. (10 mm) minimum ID.
- **Clamp & Swing Functions –** Hoses and fittings should be No. 8 with 13/32 in, (10 mm) minimum ID, except for internal reeving arrangements where hoses and fittings may be No. 6 minimum with 9/32 in. (7 mm) minimum ID.

A and B
RH THINLINE™ 2-Port Hose Reel Group and
LH THINLINE™ 4-port Hose Reel Group

OR

A,B and C
RH and LH THINLINE™ 2-port Hose Reel Groups and
Mast Single Internal Hose Reeving Group

OR

A and C
RH THINLINE™ 2-Port Hose Reel Group and
Mast Double Internal Hose Reeving Group

CAUTION: Rotate function supply circuit back pressure exceeding 500 psi (35 bar) and a maximum flow rate of 15 GPM (54 L/min.) can result in excessive oil heating, reduced attachment performance and shortened hydraulic system life. Check for restrictions such as numerous fittings and fitting/hose sizes less than No. 8.

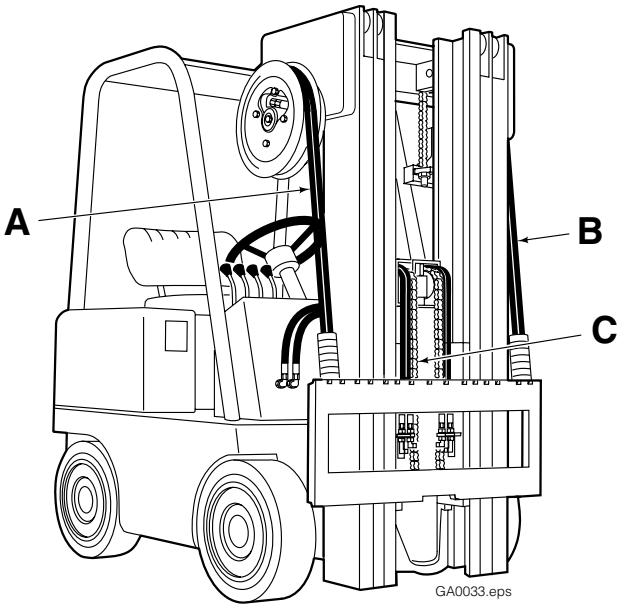

WARNING: Rated capacity of the truck/attachment combination is a responsibility of the original truck manufacturer and may be less than that shown on the attachment nameplate. Consult the truck nameplate.

Truck Relief Setting

2000 psi (140 bar) Recommended
2300 psi (160 bar) Maximum

Truck Flow Volume ①

22H–33H	Min. ②	Recommended	Max. ③
Rotate/Clamp	5 GPM (18 L/min.)	10 GPM (37 L/min.)	15 GPM (56 L/min.)
Swing	1 GPM (4 L/min.)	2 GPM (7.5 L/min.)	3 GPM (12 L/min.)

① Cascade H-Series Swing Frame Paper Roll Clamps are compatible with SAE 10W petroleum base hydraulic fluid meeting Mil. Spec. MIL-0-5606 or MIL-0-2104B. Use of synthetic or aqueous base hydraulic fluid is not recommended. If fire resistant hydraulic fluid is required, special seals must be used. Contact Cascade.

② Flow less than recommended will result in rotate speed less than 2 RPM.

③ Flow greater than maximum can result in excessive heating, reduced system performance and short hydraulic system life.

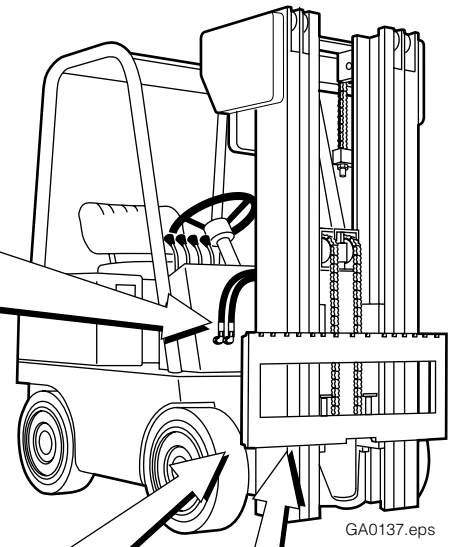

GA0137.eps

GA0028.eps

Carriage Mount Dimension (A) ITA (ISO)

	Minimum	Maximum
Class II	14.94 in. (380.0 mm)	15.00 in. (381.0 mm)
Class III	18.68 in. (474.5 mm)	18.74 in. (476.0 mm)
Class IV	23.44 in. (595.5 mm)	23.50 in. (597.0 mm)

Carriage

Clean and inspect carriage bars for damage and smoothness. Repair any protruding welds or damaged notches.

Auxiliary Valve Functions

Check for compliance with ANSI (ISO) standards.

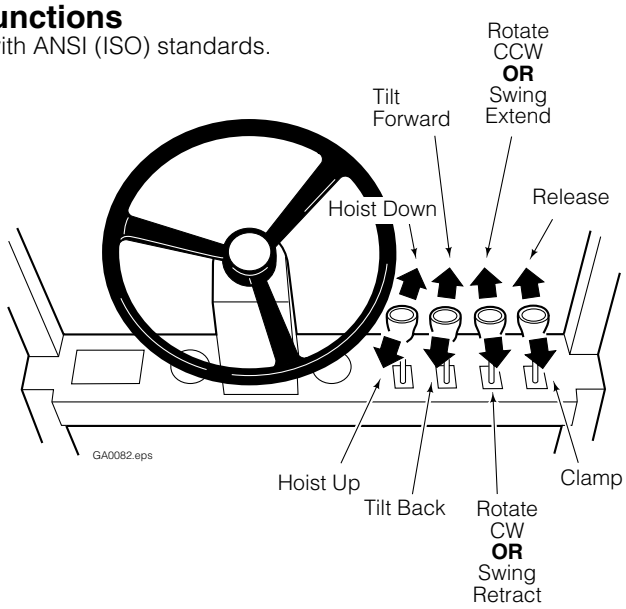

Swing Control Valve Installation

Follow the steps shown to install a Swing Frame Paper Roll Clamp. Read and understand all WARNING statements. If you don't understand a procedure, ask your supervisor or call the nearest Cascade Service Department for assistance.

NOTE: Swing Frame Clamps require a solenoid-operated control valve group to convert a two function auxiliary control valve to three function operation.

For hose reel information, refer to Installation Instructions 673835 for THINLINE™ 2-Port Hose Reels and Installation Instructions 675395 for THINELINE™ 2-Port Hose Reels (for masts without internal reeving). Control valve groups for different voltages are listed in the table shown.

Control Valve Group

With Knob Part Number	With Low Profile Switch Part Number	Truck Voltage
674924	6014883	12V
674925	6014885	24V
674926	6014886	36V
674927	6014887	48V

1 Determine an appropriate mounting location for the control valve on the truck cowl. The valve can be mounted horizontally or vertically. The valve must not extend outside the width of the cowl or interfere with the truck mast.

HORIZONTAL MOUNT

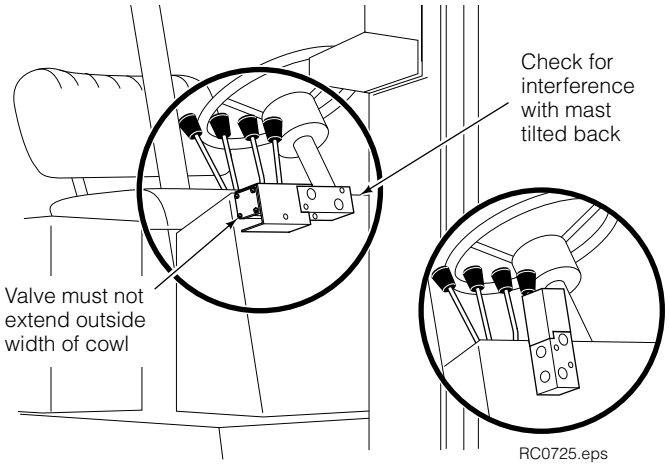

VERTICAL MOUNT

2 Assemble the solenoid valve, fittings, cover and subplate. Position the assembly on the truck cowl noting any clearance problems.

HORIZONTAL MOUNT

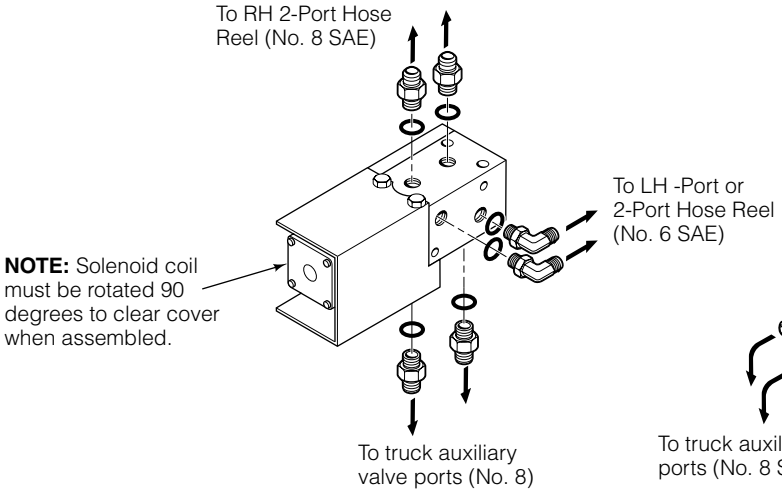

VERTICAL MOUNT

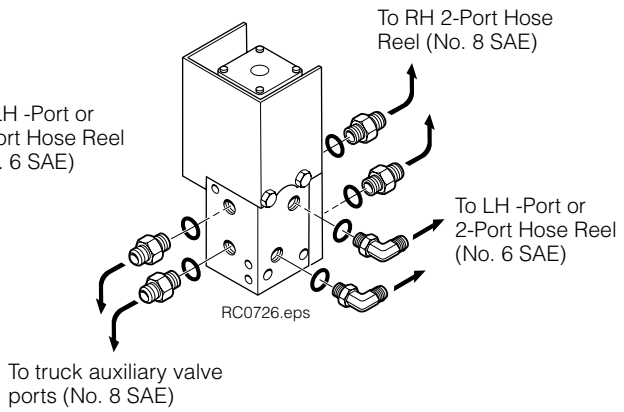

Swing Control Valve Installation

3 Mark the mounting location on the truck cowl. Grind and clean the area in preparation for welding. Tack-weld the subplate to the cowl and mount the valve to the subplate with the capscrews supplied in the kit.

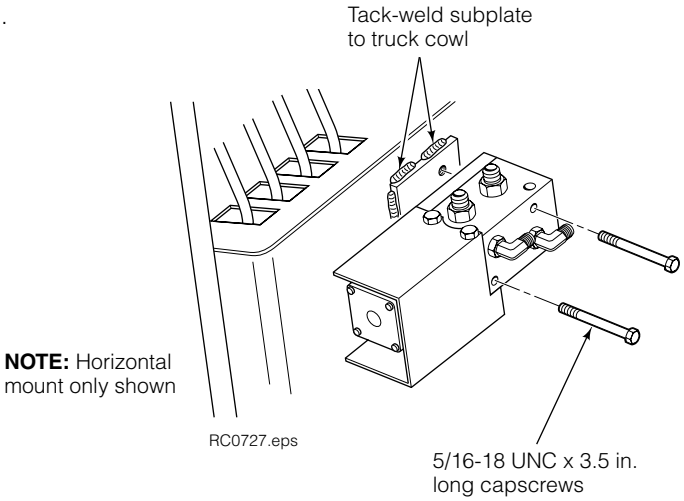

4 Measure and assembly two hoses (user-supplied) to run from the solenoid valve **P** and **T** ports to the **truck valve** ports. Install the hoses.

IMPORTANT: Proceed to step 7 if lift truck is equipped with mast internal hose reeving.

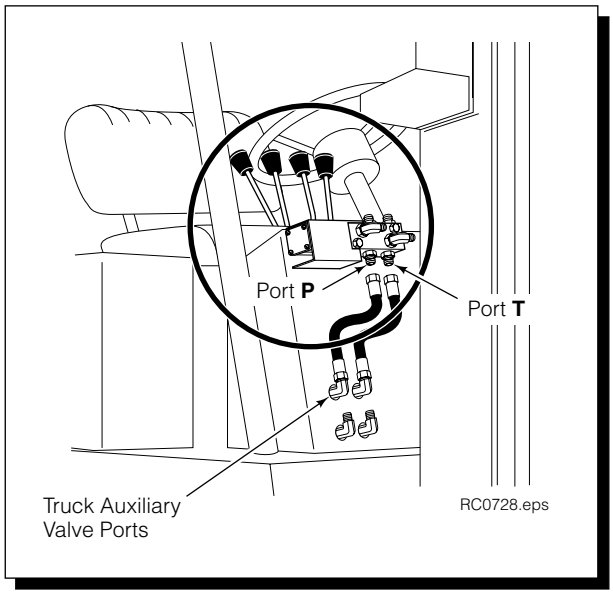

Installation with RH 2-Port and LH 4-Port Hose Reels

5 **Rotate Function –** Measure and assemble two hoses (user-supplied) to run from the control valve **C1** and **C4** ports to the **RH hose reel**. Install hoses.

Swing Function – Measure and assemble two hoses (user-supplied) to run from the control valve **C2** and **C3** ports to the **LH 4-port hose reel 3 and 4** ports. Install hoses.

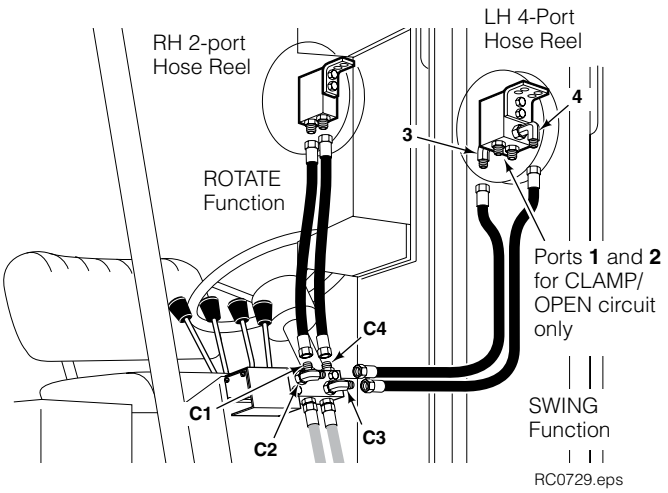

Installation with RH 2-Port and LH 4-Port Hose Reels (Continued)

6 **Clamp Function –** Measure and assemble two hoses (user-supplied) to run from the **truck valve** ports to the **LH 4-port hose reel 1 and 2** ports. Install hoses.

> **WARNING**: The hose operating the OPEN function must connect to **Port 1** on the 4-port hose reel.

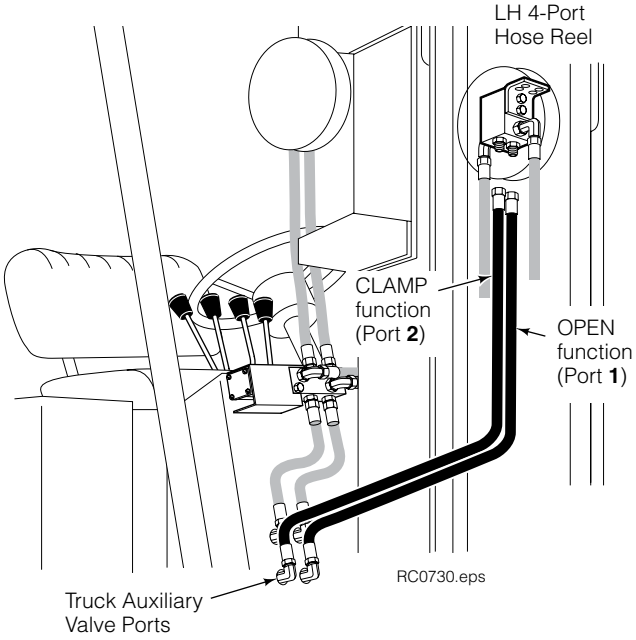

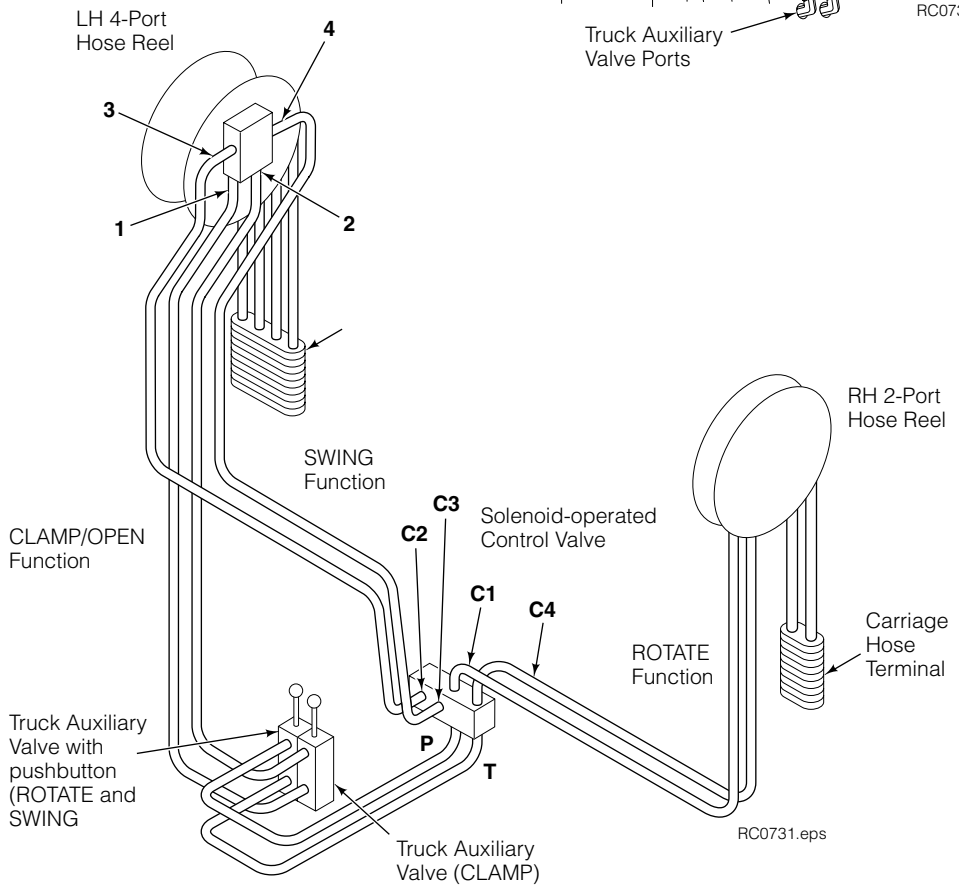

Swing Control Valve Installation

Installation with RH and LH 2-Port Hose Reels and Internal Hose Reeving

7 **Rotate Function –** Measure and assemble two hoses (user-supplied) to run from the control valve **C1** and **C4** ports to the **RH hose reel**. Install hoses.

Swing Function – Measure and assemble two hoses (user-supplied) to run from the control valve **C2** and **C3** ports to the **internal hose reeving hoses**. Install hoses.

8 **Clamp Function –** Measure and assemble two hoses (user-supplied) to run from the **truck valve** ports to the **LH 2-port hose reel**. Install hoses.

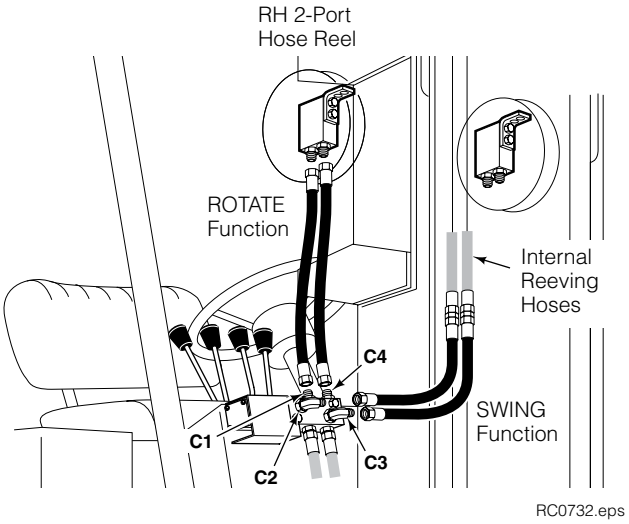

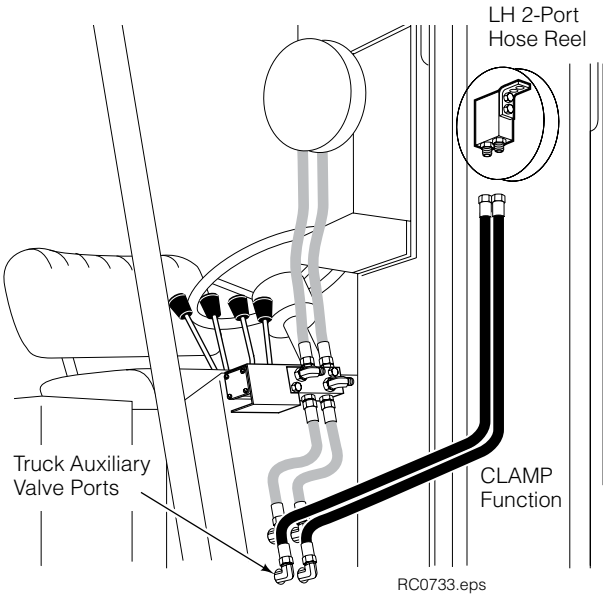

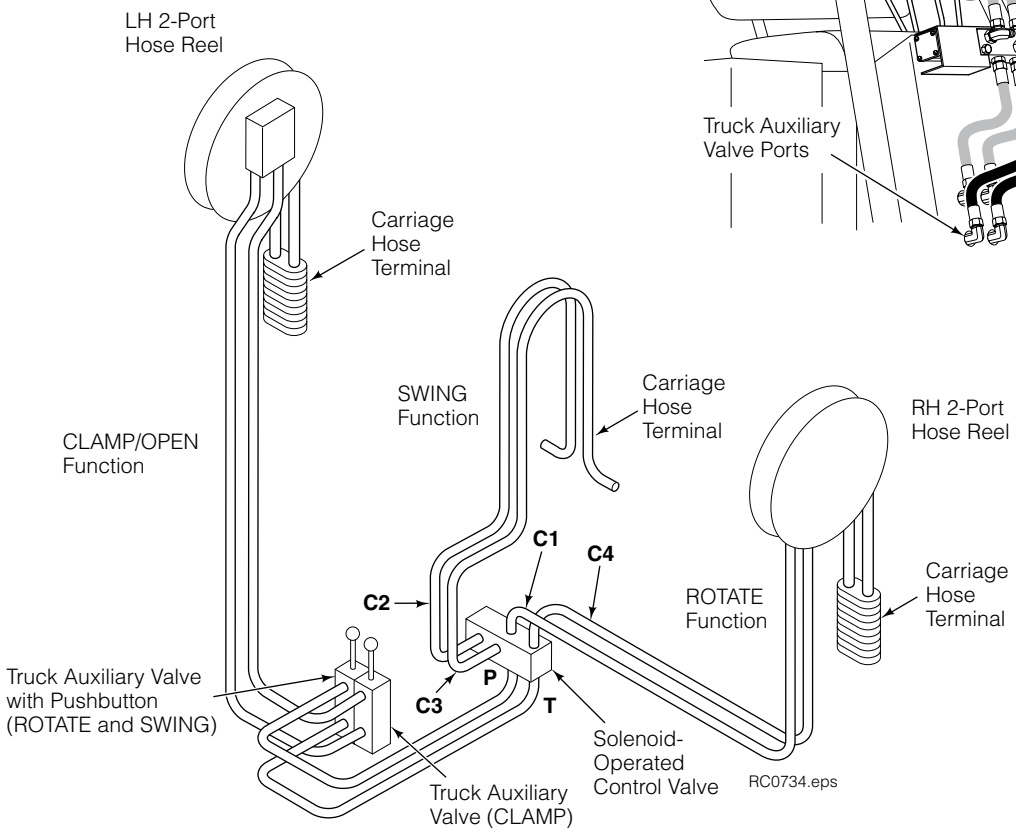

9 Locate the auxiliary valve lever that operates the hydraulic hoses connected to the solenoid control valve **P** and **T** ports. Install a new knob with pushbutton, or shrink-wrap low profile switch onto the control lever.

IMPORTANT: Lever should control the ROTATE function per ANSI (ISO) standard. When the pushbutton is depressed, the lever should activate the SWING function.

CAUTION: Secure cable with cable ties to avoid pinching at truck cowl during handle movement.

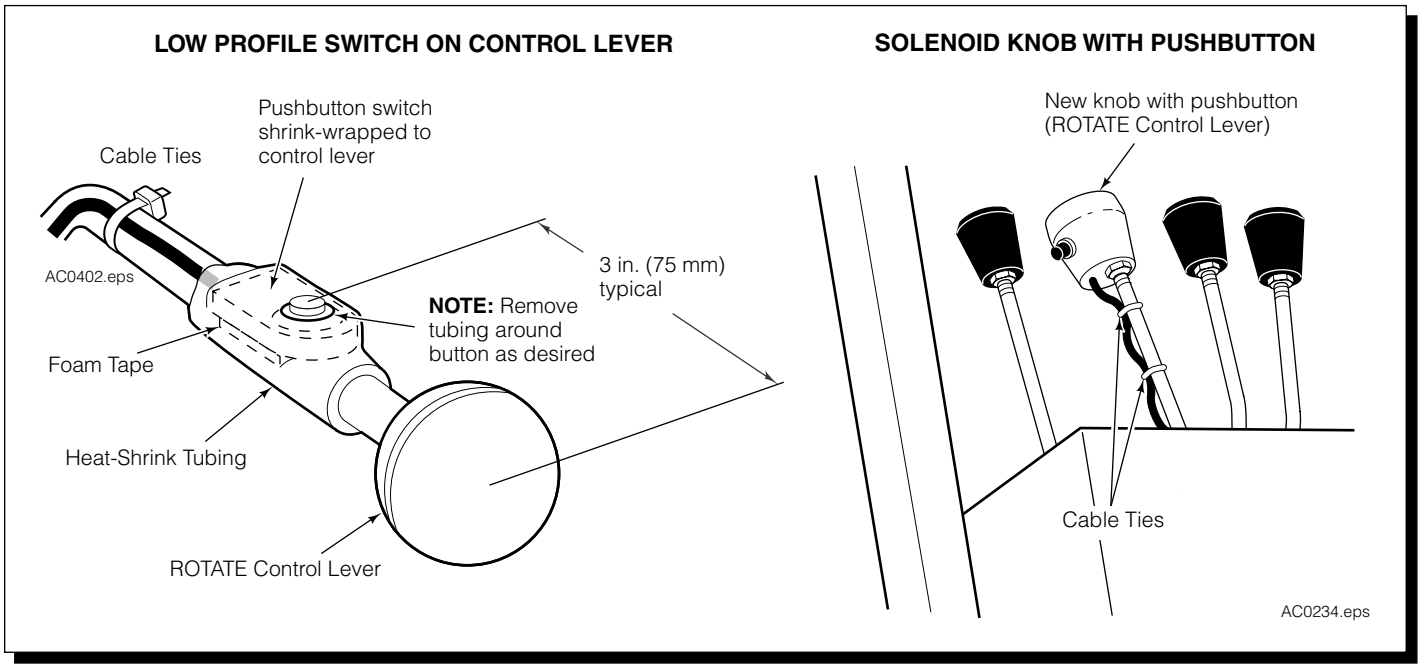

10 Connect the wiring from the pushbutton and control valve terminals to the truck electrical system as shown.

IMPORTANT: Fuse must be connected to an unswitched positive terminal – control valve must be able to energize with truck key in off position.

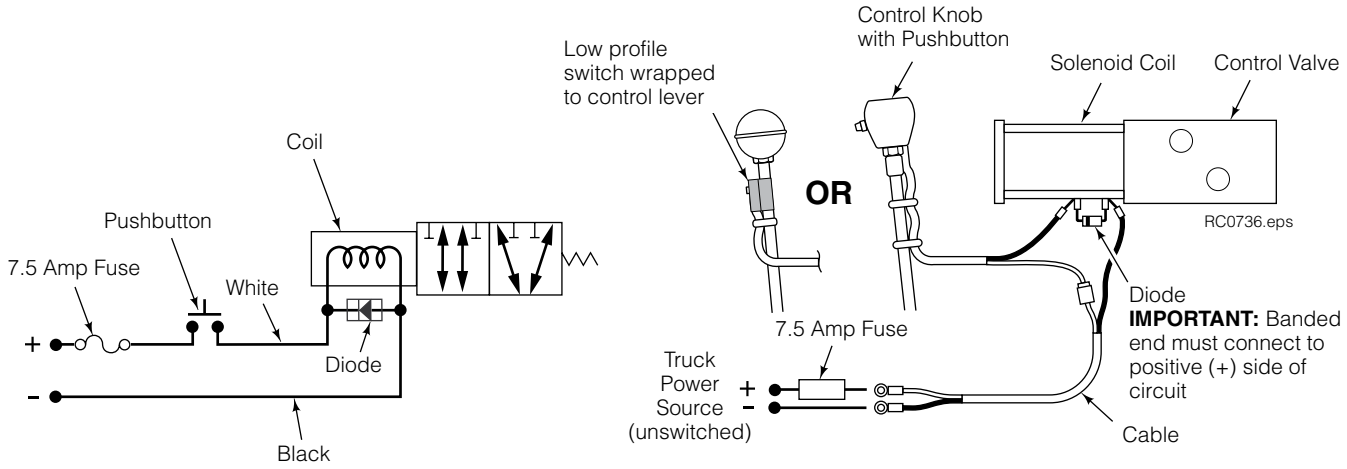

Attachment Installation

1 Attach overhead hoist

A Remove banding, set the attachment upright on pallet.

B If equipped, remove bolt-on lower mounting hooks.

WARNING: Verify that the overhead hoist and chains or straps are rated for the weight of the attachment. Refer to nameplate for attachment weight.

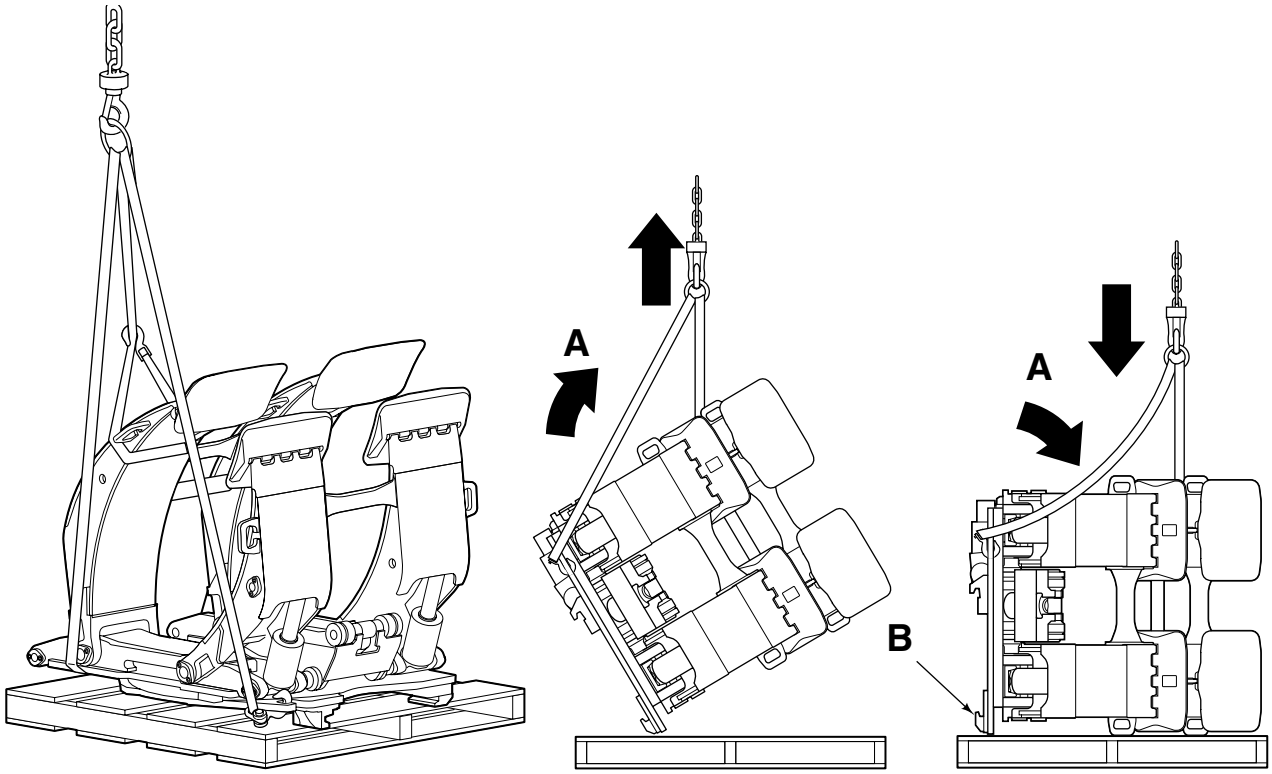

RC3754.eps

2 Unlock quick-change lower mounting hooks (if equipped)

A Move hooks into unlocked position (pin in lower hole).

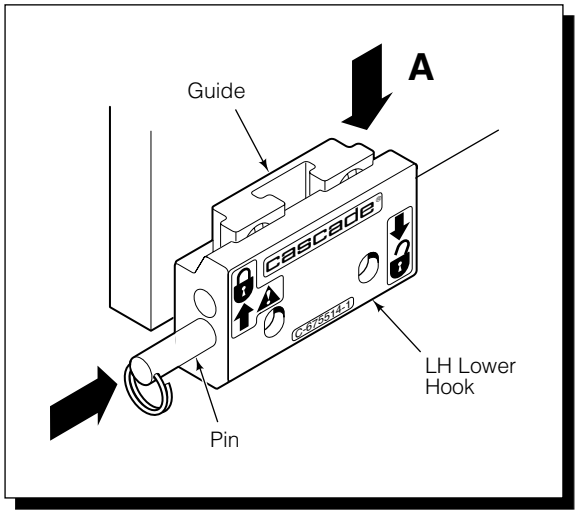

NOTE: Guides can be reversed to change hook-to-carriage clearance. Refer to step 7.

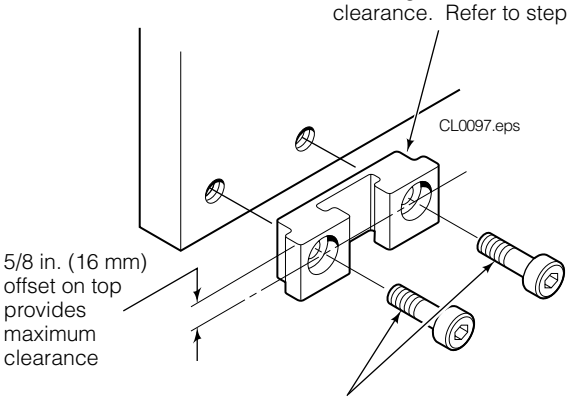

Tighten capscrews to:
Class II/III – 125 ft.-lbs. (165 Nm)
Class IV – 235 ft.-lbs. (320 Nm)

3 Prepare hoses

A Position truck carriage behind the attachment.

B Determine hose lengths required.

C Cut hoses to length, install end fittings.

CAUTION: Rotate function supply circuit back pressure exceeding 500 psi (35 bar) and a maximum flow rate of 15 GPM (54 L/min.) can result in excessive oil heating, reduced attachment performance and shortened hydraulic system life. Check for restrictions such as numerous fittings and fitting/hose sizes less than No. 8.

CAUTION: Hoses should be 2300 psi (160 bar) working pressure rated for all attachment functions.

INSTALLATION USING RH & LH 2-PORT *THINLINE™* HOSE REELS, SINGLE IHR:

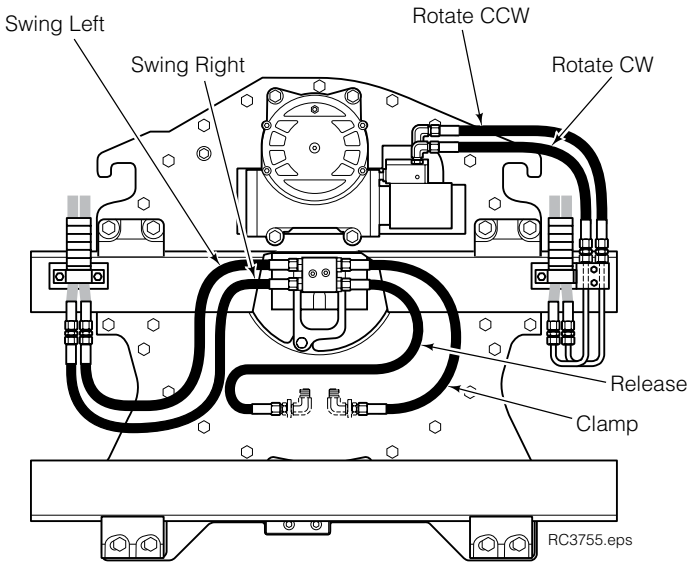

INSTALLATION USING RH 2-PORT HOSE REEL and LH 4-PORT HOSE REEL:

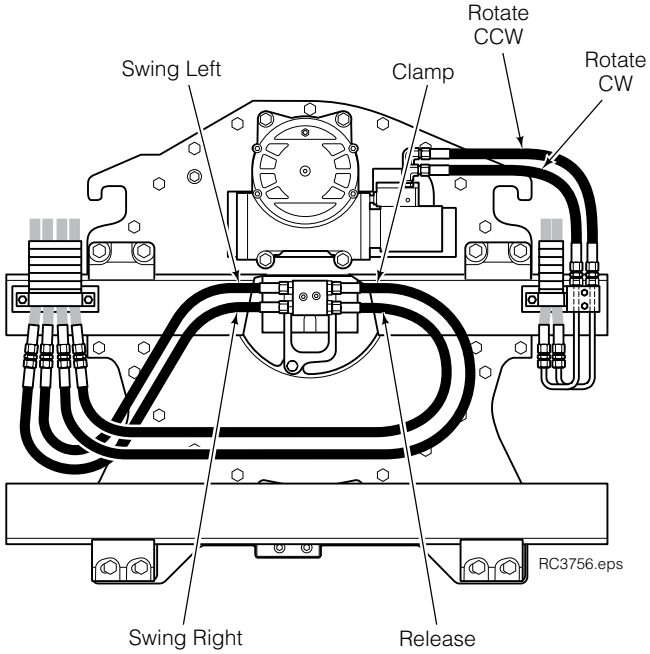

WARNING: Hose connecting revolving connection OPEN port to 4-port hose reel must be connected to outer-most hose on reel only.

4 Flush hydraulic supply hoses

A Install hoses as shown below.

B Operate auxiliary valves for 30 seconds.

C Remove union fittings.

D Install hoses to revolving connection fittings as shown in step 3, above.

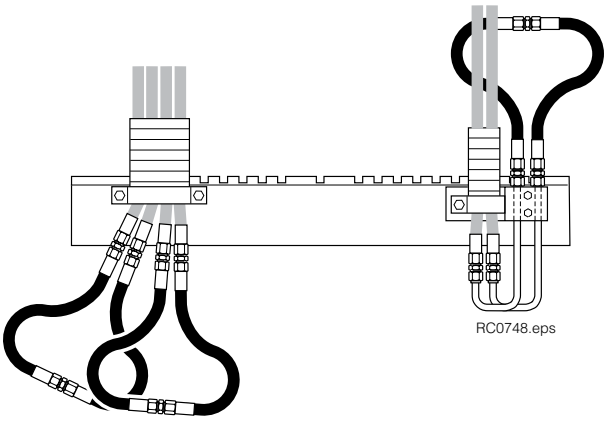

Attachment Installation

5 Check lubricant level and remove rubber vent cover

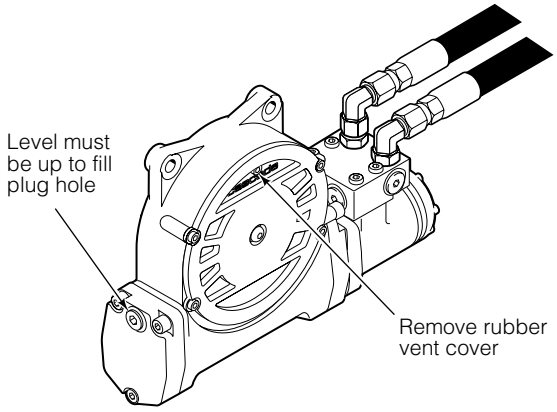

RC0139.eps

If necessary, fill gearbox with Cascade Gear Lube 656300 or equivaent SAE 90 wt. gear lube (AGMA 'mild' 6EP Gear Oil).

6 Mount attachment on truck carriage

A Center truck behind attachment.

B Tilt forward and raise carriage into position.

C Engage top mounting hooks with carriage. Make sure left hook engages closest notch on top carriage bar

D Lift attachment 2 in. (5 cm) off pallet.

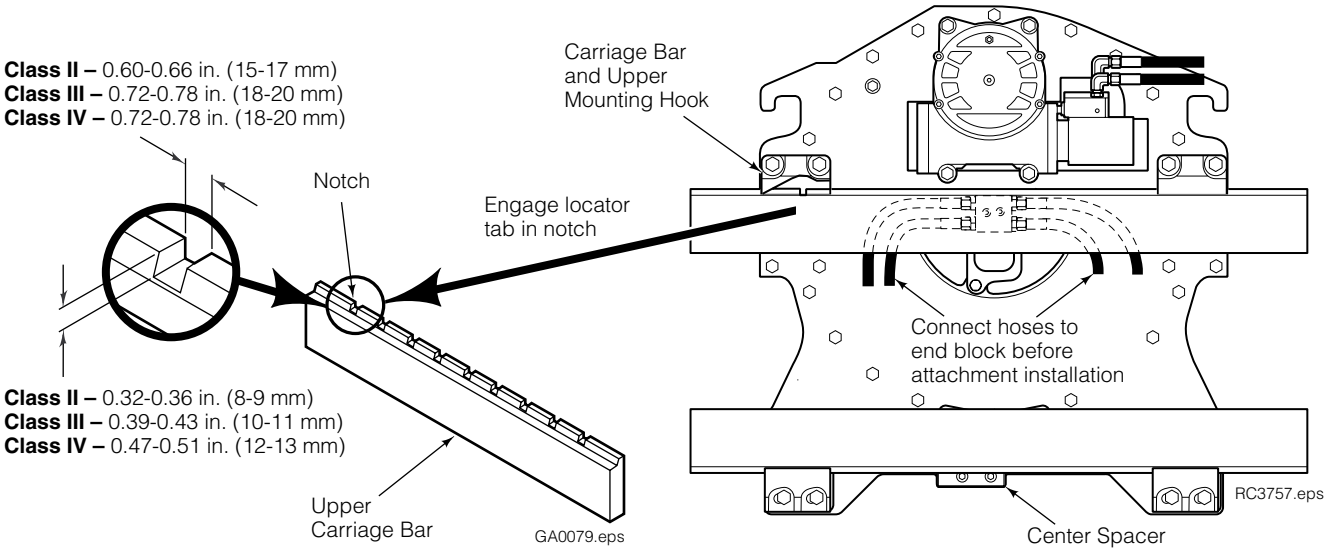

7 Install and engage lower hooks

BOLT-ON TYPE

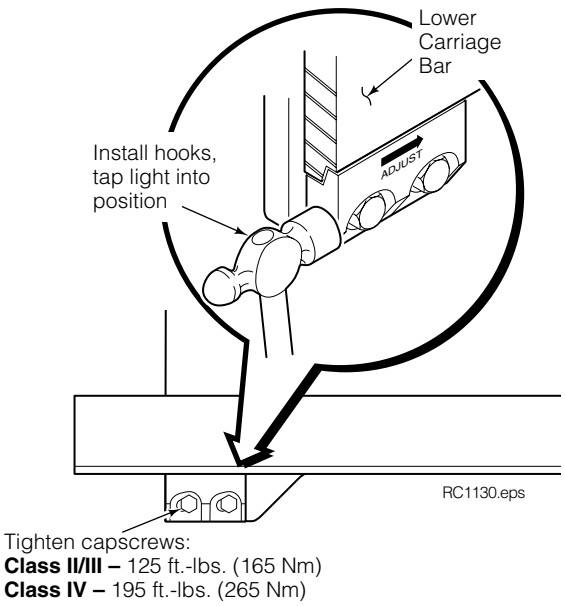

QUICK-CHANGE TYPE

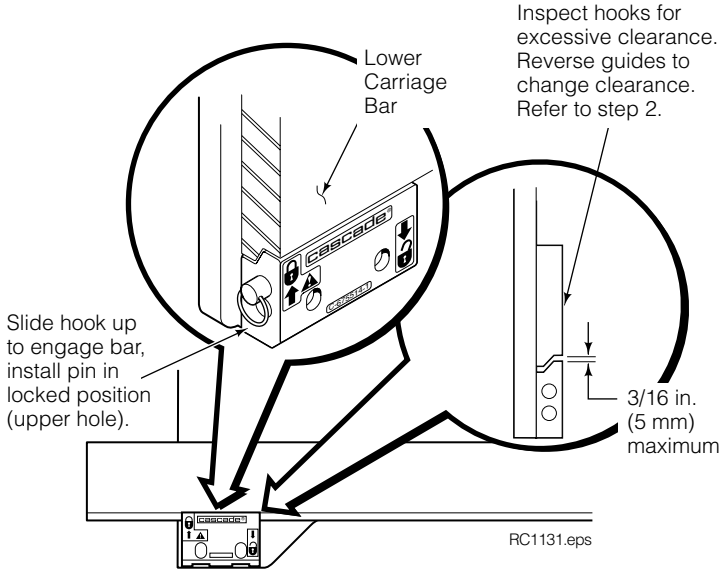

8 Connect hoses to hose terminal fittings as shown in step 3

INSTALLATION USING Rh & LH 2-PORT *THINLINE™* HOSE REELS, SINGLE IHR:

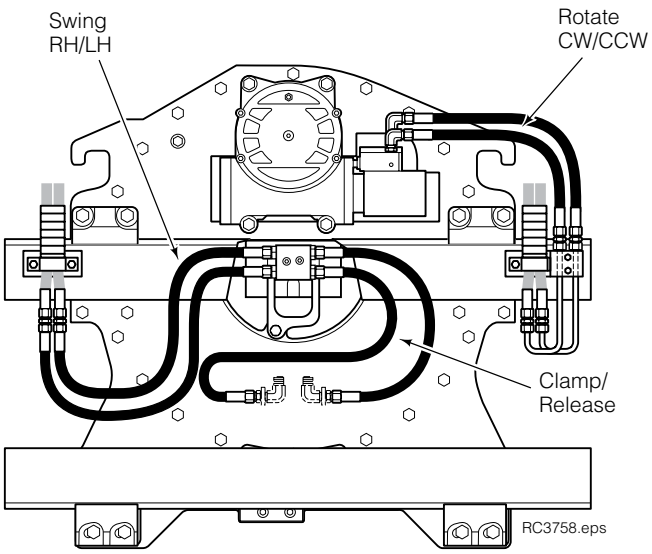

INSTALLATION USING RH 2-PORT HOSE REEL and LH 4-PORT HOSE REEL:

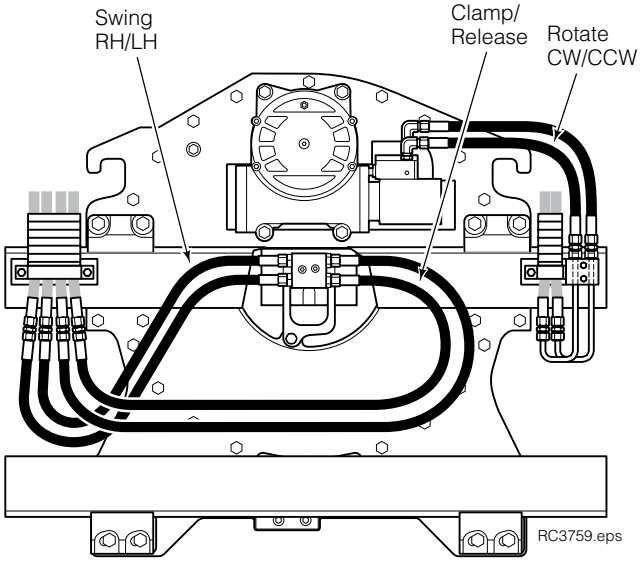

9 Install stop block kit

- Preheat each stop block and carriage bar weld area to 325° F (180° C).
- Use AWS E-7018 low hydrogen rod and weld a .25 in. (6 mm) fillet full length on three side of each stop block.

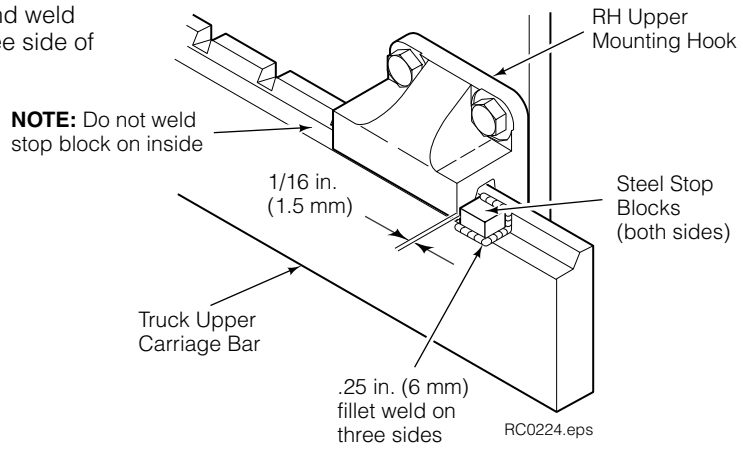

10 180° Stop Valve Adjustment (if equipped/required)

WARNING: Make sure all personnel are clear of attachment during adjustment.

A Loosen the jam nut on the stop valve adjustment screws and turn the screws OUT (counterclockwise) until a groove marking the maximum-out position is visible. Adjustment screws should be adjusted equally.

IMPORTANT: Backing the adjustment screws out past the groove will cause hydraulic leakage.

B Using a load that: A) is the heaviest to be lifted, or B) requires maximum motor torque, rotate the attachment back and forth to the stops at full speed for 1–2 minutes before making adjustments. Observe whether the attachment fully completes its rotation slowly into the hard stop.

C If rotation does not continue into the hard stop, rotate the stop valve off the ramp and turn the adjustment screw IN (clockwise) one-eighth turn. Test for complete rotation slowly into the hard stop.

D Repeat Step C until the attachment fully completes its rotation slowly into the hard stop. Tighten the jam nut on the adjustment screw.

E Check the torque on the stop block capscrews and tighten to 80 ft.-lbs. (110 Nm) if necessary.

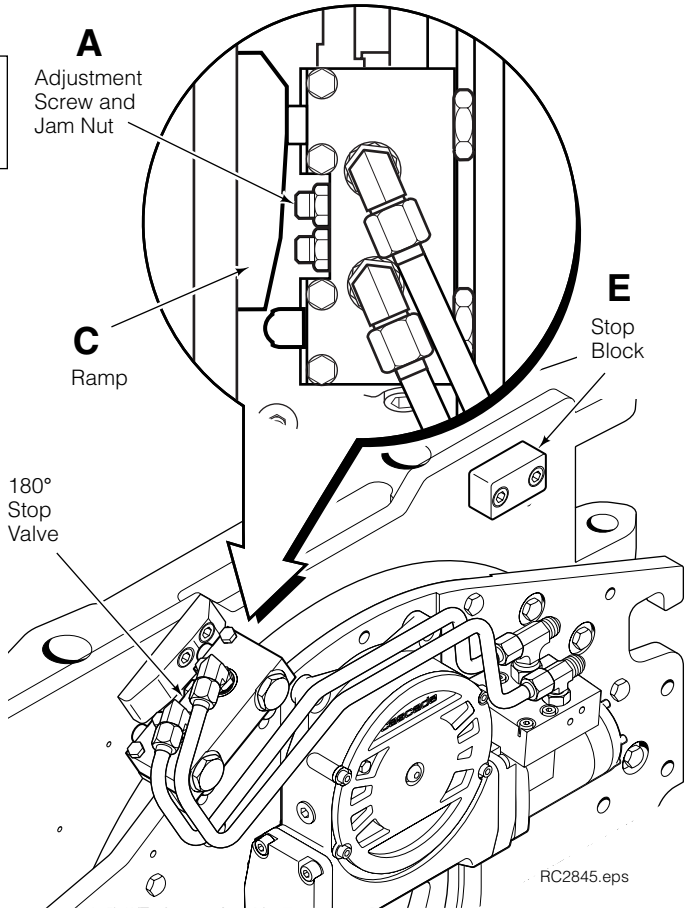

11 Electronic Rotational Control (ERC) Stop Adjustment (if equipped/required)

A Rotate the attachment in each direction to verify it stops in vertical and horizontal (bilge) position.

- If rotation does not stop at vertical or bilge position, refer to troubleshooting section in the service manual.
- If attachment stops in vertical and horizontal (bilge) positions, proceed to Step B.
- If rotation does no stop at exact vertical or bilge positions, limit switches may be adjusted as described in Step D.

B Wait 3 seconds to rotate attachment again, verifying it again stops in the vertical or horizontal (bilge) positions.

C Press and hold override pushbutton and verify that the attachment will rotate continuously without stopping.

- If continuous rotation does not occur when holding pushbutton, refer to troubleshooting section in the service manual.

D Inspect limit switch end rollers for full engagement on deceleration ramps and stop capscrews. If required, adjust limit switch position and/or stop capscrew to precisely locate stop position within ±0.5 in. (13 mm).

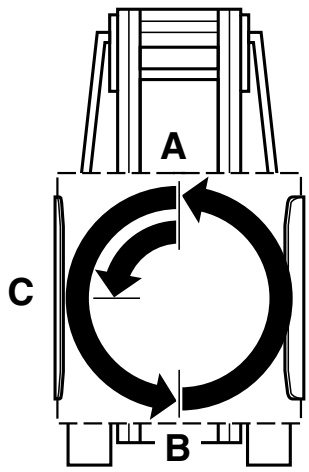

AC0231.eps

Rotational Control stops clamp at vertical positions **A** top, **B** bottom and **C** bilge position.

To continue rotation after stopping, wait 3 seconds, **OR** press override button.

For continuous rotation, press and hold button.

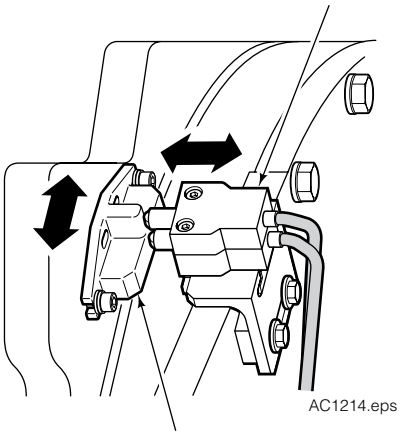

AC1214.eps

12 Cycle Attachment Functions

WARNING: Make sure all personnel are clear of the attachment during testing.

- With no load, cycle all functions several times.
- Check functions for operation in accordance with ANSI (ISO) standards.
- Clamp and rotate a maximum load, check for smoothness and normal rotation.
- Check for leaks at fittings, revolving connection and cylinder rod ends.

WARNING: Truck control handle and attachment function activation shown here conforms to ANSI/ITSDF B56.1 (ISO 3691) recommended practices. Failure to follow these practices may lead to serious bodily injury or property damage. End user, dealer and OEMs should review any deviation from the practices for safe operation.

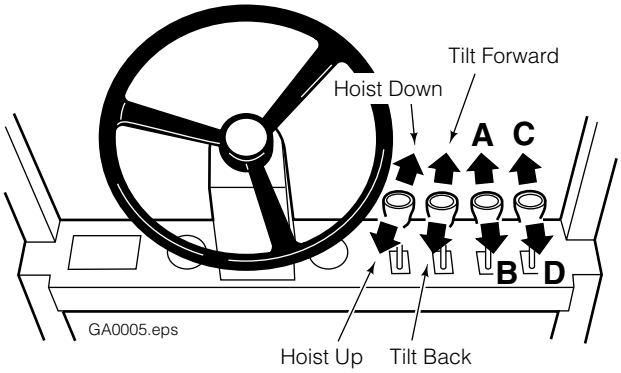

LONG ARM
(Vertical & horizontal positions only)

C *Release*

D *Clamp*

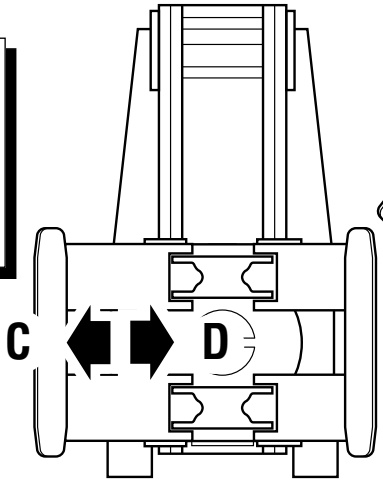

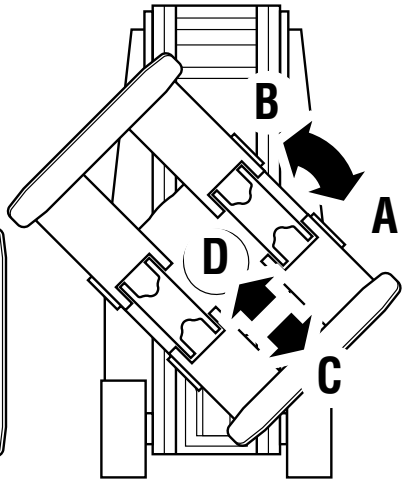

ROTATE
(Driver's view)

A *Counterclockwise (CCW)*

B *Clockwise (CW)*

SHORT ARM
(45-degree position only)

C *Open*

D *Close*

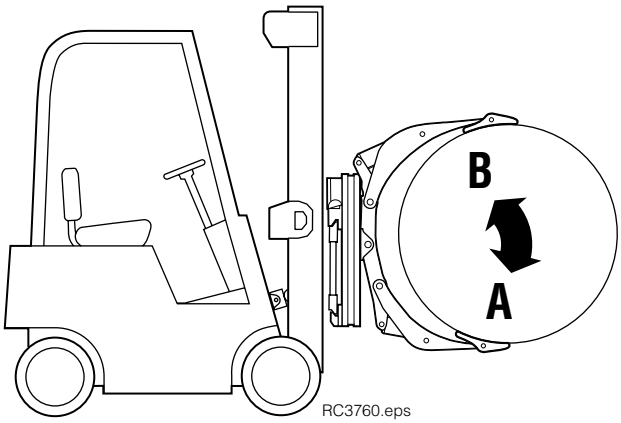

SWING
(Bilge handling shown)

A *Push Button - Extend*

B *Push Button - Retract*

NOTE: If swing components require service, refer to H-Series Swing Frame Paper Roll Clamp Service Manual Supplement 6844788. If arms, clamp cylinders and rotation related components require service, refer to H-Series Fixed Frame Pivot Arm Paper Roll Clamp Service Manual 6078255.

Daily

Check items shown each day. Report problems to your supervisor. See Service Manual for troubleshooting, maintenance and repair procedures.

- Check for loose or missing bolts, worn or damaged hoses, and hydraulic leaks.
- Check the edges of the contact pads for wear or sharp nicks that could damage or tear paper rolls. Grind the edges smooth.
- Check the contact pad pivot joints for wear. Repair or replace as necessary.
- Check that load handling hydraulic system is functioning properly. Clamp Force Indicators 830141, 832442 and 200645 are available for this test.
- Check decals and nameplate for legibility.

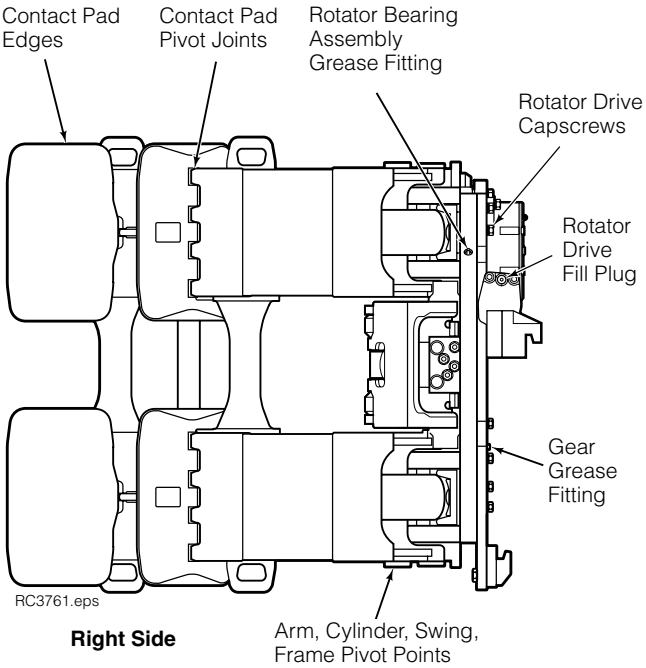

1000-Hour Maintenance

After each 1000 hours of truck operation, in addition to the daily inspection, perform the following maintenance procedures:

- Check the torque on the stop block capscrews. Tighten to 80 ft.-lbs. (110 Nm), if necessary.
- Check sample of baseplate capscrews for proper torque value. See Technical Bulletin TB183 for checking and replacement procedures.
- Check sample of bearing capscrews for proper torque value. See Technical Bulletin TB183 for checking and replacement procedures.

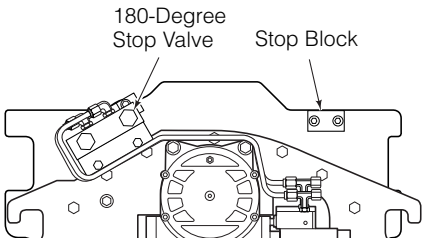

180° Stop Valve Option
Back (Driver's) View

WARNING: A sampling of faceplate and baseplate bearing assembly capscrews must be check for proper torque at 500 hours (see TB183), and all capscrews checked at every 2000 hours. Failure to keep the capscrews tightened can result in attachment damage and serious injury.

- Tighten mounting hook capscrews:

  Class II/III – 125 ft.-lbs. (165 Nm)
  Class IV – 195 ft.-lbs. (265 Nm)
- Tighten rotator drive capscrews to 65 ft.-lbs. (88 Nm).
- Lubricate rotator bearing assembly with EP-2 grease (Whitmore 'Omnitask' or equivalent). Rotate clamp in 90 degree increments and grease in each position.
- Check rotator drive gearcase lubricant level. Lubricant should be up to bottom of fill plug hole. If necessary, fill with Cascade Rotator Drive Lubricant, Part No. 656300, or SAE 90 wt. gear lube (AGMA 'mild' 6 EP Gear Oil). Replace plug.

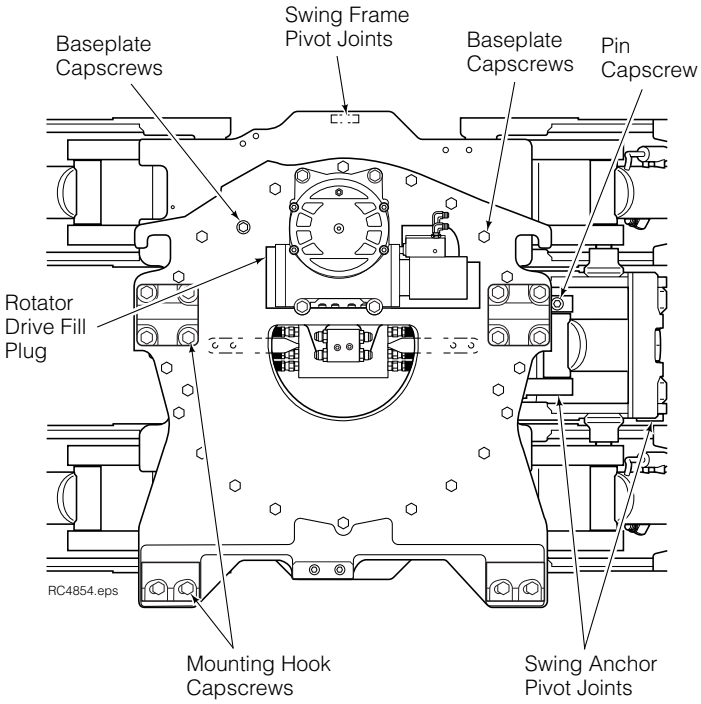

Back (Driver's) View

1000-Hour Maintenance
(continued)

- Inspect all arm, frame and cylinder pivot bushings for wear. Replace if necessary.
- Inspect all load bearing structural welds on arms, swing frame pivots, arm pivots and cylinder pivot areas for visual cracks. Replace components as required.

2000-Hour Maintenance

After each 2000 hours of truck operation, in addition to the daily inpspection and 1000-hour maintenance, perform the following maintenance procedures:

- Check **all** rotation bearing capscrews for proper torque value. See Technical Bulletin TB183 for checking and replacement procedures.
- Inspect all arm and cylinder pivot pins for wear. Replace if necessary.

4000-Hour Maintenance

After each 4000 hours of truck operation, in addition to the daily inspection, 1000 and 2000-hour maintenance, perform the following maintenance procedures:

- Due to normal mechanical wear and component service life, cylinder seals should be replaced to maintain performance and safe operation. Refer to H-Series Fixed Frame Pivot Arm Paper Roll Clamp Service Manual 6078255, Section 4.4, for cylinder service.

WARNING: After completing any service procedure, always test the attachment through five complete cycles. First test the attachment empty, then test with a load to make sure the attachment operates correctly before returning it to the job.

(EN) NAMEPLATE ICONS
(BG) ТАБЕЛКА С ИМЕ ИКОНИ
(CS) JMENOVKA IKONY
(DA) NAVNESKILT IKONER
(DE) TYPENSCHILD SYMBOLE
(EL) ΟΝΟΜΑΣΤΙΚΗΣ ΕΙΚΟΝΙΔΙΑ
(ES) PLACA DE ICONOS
(ET) NIMEPLAADILE IKOONID
(FI) NIMIKYLTTI KUVAKKEET
(FR) PLAQUE ICÔNES
(GA) IDENTIFICACIÓN ICONAS
(HU) NÉVTÁBLÁN IKONOK
(IS) NAFNASKILTATÁKN
(IT) ICONE DELLA TARGA
(JA) 銘板アイコン
(KO) 명판 아이콘
(LT) NOMINALUS PIKTOGRAMOS
(LV) AR NOSAUKUMU, IKONAS
(MT) NAMEPLATE ICOANE
(NL) NAAMBORD ICONEN
(NO) NAVNEPLATE-IKONER
(PL) NAMEPLATE ICOANE
(PT) IDENTIFICAÇÃO ÍCONES
(RO) ICONOS DE PLACA
(RU) ТАБЛИЧКУ ЗНАЧКОВ
(SK) MENOVKA ICONS
(SL) TABLICA IKONE
(SV) NAMNSKYLTEN IKONER
(TR) BILGI ETIKETI SIMGELERI
(ZH) 铭牌图标

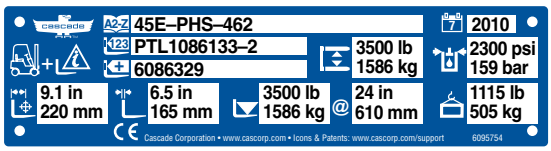

(EN) MODEL
(BG) МОДЕЛ
(CS) MODEL
(DA) MODEL
(DE) MODELL
(EL) ΜΟΝΤΕΛΟ
(ES) MODELO
(ET) MUDEL
(FI) MALLI
(FR) MODÈLE
(GA) DÉANAMH AGUS AINM
(HU) MODELL
(IS) MÓDEL
(IT) MODELLO
(JA) モデル
(KO) 모델
(LT) MODELIS
(LV) MODELIS
(MT) MUDELL
(NL) MODEL
(NO) MODELL
(PL) MODEL
(PT) MODELO
(RO) MODEL
(RU) МОДЕЛЬ
(SK) MODEL
(SL) MODEL
(SV) MODELL
(TR) MODEL
(ZH) 型号

(EN) SERIAL NUMBER
(BG) СЕРИЕН НОМЕР
(CS) SÉRIOVÉ ČÍSLO
(DA) SERIENUMMER
(DE) SERIENNUMMER
(EL) ΣΕΙΡΙΑΚΟΣ ΑΡΙΘΜΟΣ
(ES) NÚMERO DE SERIE
(ET) SEERIANUMBER
(FI) SARJANUMERO
(FR) NUMERO DE SERIE
(GA) SRAITHUIMHIR
(HU) GYÁRI SZÁM
(IS) RAÐNÚMER
(IT) NUMERO DI SERIE
(JA) シリアル番号
(KO) 일련 번호
(LT) SERIJINIS NUMERIS
(LV) SĒRIJAS NUMURS
(MT) NUMRU TAS-SERJE
(NL) SERIENUMMER
(NO) SERIENUMMER
(PL) NUMER SERYJNY
(PT) NÚMERO DE SÉRIE
(RO) NUMĂR DE SERIE
(RU) СЕРИЙНЫЙ НОМЕР
(SK) SÉRIOVÉ ČÍSLO
(SL) SERIJSKA ŠTEVILKA
(SV) SERIENUMMER
(TR) SERI NUMARASI
(ZH) 序列号

(EN) ADDITIONAL INFORMATION
(BG) ДОПЪЛНИТЕЛНА ИНФОРМАЦИЯ
(CS) DOPLŇKOVÉ INFORMACE
(DA) YDERLIGERE OPLYSNINGER
(DE) ZUSÄTZLICHE INFORMATIONEN
(EL) ΠΡΟΣΘΕΤΕΣ ΠΛΗΡΟΦΟΡΙΕΣ
(ES) INFORMACIÓN ADICIONAL
(ET) LISAINFO
(FI) LISÄTIETOJA
(FR) INFORMATIONS SUPPLÉMENTAIRES
(GA) TUILLEADH FAISNÉISE
(HU) KIEGÉSZÍTŐ INFORMÁCIÓ
(IS) VIÐBÓTARTÆKI
(IT) INFORMAZIONI AGGIUNTIVE
(JA) 追加情報
(KO) 추가 장비
(LT) PAPILDOMA INFORMACIJA
(LV) PAPILDU INFORMĀCIJA
(MT) INFORMAZZJONI ADDIZZJONALI
(NL) AANVULLENDE INFORMATIE
(NO) TILLEGGSUTSTYR
(PL) INFORMACJE DODATKOWE
(PT) INFORMAÇÕES ADICIONAIS
(RO) INFORMAȚII SUPLIMENTARE
(RU) ДОПОЛНИТЕЛЬНАЯ ИНФОРМАЦИЯ
(SK) ĎALŠIE INFORMÁCIE
(SL) DODATNE INFORMACIJE
(SV) YTTERLIGARE INFORMATION
(TR) İLAVE EKIPMAN
(ZH) 其它信息

(EN) MAXIMUM CAPACITY
(BG) МАКСИМАЛЕН КАПАЦИТЕТ
(CS) MAXIMÁLNÍ NOSNOST
(DA) MAKS. KAPACITET
(DE) MAXIMALKAPAZITÄT
(EL) ΜΕΓΙΣΤΗ ΧΩΡΗΤΙΚΟΤΗΤΑ
(ES) CAPACIDAD MÁXIMA
(ET) MAKSIMAALNE JÕUDLUS
(FI) MAKSIMIKAPASITEETTI
(FR) CAPACITE MAXIMUM
(GA) UASCHUMAS
(HU) MAXIMÁLIS KAPACITÁS
(IS) HÁMARKS GETA
(IT) PORTATA MASSIMA
(JA) 最大容量
(KO) 최대 용량
(LT) MAKSIMALI GALIA
(LV) MAKSIMĀLĀ CELTSPĒJA
(MT) KAPAĊITÀ MASSIMA
(NL) MAXIMAAL LAADVERMOGEN
(NO) MAKSIMAL KAPASITET
(PL) UDŹWIG MAKSYMALNY
(PT) CAPACIDADE MÁXIMA
(RO) CAPACITATE MAXIMĂ
(RU) МАКСИМАЛЬНАЯ ГРУЗОПОДЪЕМНОСТЬ
(SK) MAXIMÁLNA NOSNOSŤ
(SL) NAJVEČJA ZMOGLJIVOST
(SV) MAXIMAL KAPACITET
(TR) MAKSIMUM KAPASITE
(ZH) 最大承载能力

(EN) MAXIMUM CAPACITY BETWEEN FORKS
(BG) МАКСИМАЛНА ТОВАРОПОДЕМНОСТ МЕЖДУ ВИЛИЦИТЕ
(CS) MAXIMÁLNÍ NOSNOST MEZI VIDLICEMI
(DA) MAKSIMAL KAPACITET MELLEM GAFLERNE
(DE) MAXIMALE TRAGFÄHIGKEIT ZWISCHEN DEN GABELN
(EL) ΜΕΓΙΣΤΗ ΙΚΑΝΌΤΗΤΑ ΑΝΑΜΕΣΑ ΣΤΙΣ ΠΕΡΌΝΕΣ
(ES) CAPACIDAD MÁXIMA ENTRE HORQUILLAS
(ET) KAHVLITE VAHELINE MAX. TÕSTEVÕIME
(FI) MAKSIMINOSTOKYKY HAARUKOIDEN VÄLISSÄ
(FR) CAPACITÉ MAXIMALE ENTRE LES FOURCHES
(GA) UASCHUMAS IDIR NA GABHAIL
(HU) MAXIMUM TEHERBÍRÁS VILLÁK KÖZÖTT
(IS) HÁMARKS GETA MILLI GAFLA
(IT) PORTATA MASSIMA TRA LE FORCHE
(JA) フォーク間の最大容量
(KO) 포크 간 최대 용량
(LT) MAKSIMALI GALIA TARP ŠAKIŲ
(LV) MAKSIMĀLĀ CELTSPĒJA STARP DAKŠĀM
(MT) KAPAĊITÀ MASSIMA BEJN IL-FRIEKET
(NL) MAXIMUMCAPACITEIT TUSSEN VORKEN
(NO) MAKSIMAL KAPASITET MELLOM GAFLENE
(PL) MAKSYMALNY UDŹWIG POMIĘDZY WIDŁAMI
(PT) CAPACIDADE MÁXIMA ENTRE GARFOS
(RO) CAPACITATEA MAXIMĂ ÎNTRE FURCI
(RU) МАКСИМАЛЬНАЯ ГРУЗОПОДЪЕМНОСТЬ МЕЖДУ ВИЛАМИ
(SK) MAXIMÁLNA NOSNOSŤ MEDZI VIDLICAMI
(SL) NAJVEČJA ZMOGLJIVOST MED VILICAMI
(SV) MAXIMAL KAPACITET MELLAN GAFFLAR
(TR) ÇATALLAR ARASI YÜK MERKEZINDEKI
(ZH) 最大承载能力

(EN) @ LOAD CENTER
(BG) В ЦЕНТЪРА НА НАТОВАРВАНЕ
(CS) @ STŘED NÁKLADU
(DA) VED LASTCENTRUM
(DE) @ LASTSCHWERPUNKT
(EL) ΣΤΟ ΚΕΝΤΡΟ ΒΑΡΟΥΣ
(ES) @ CENTRO DE CARGA
(ET) @ KOORMUSE RASKUSKESE
(FI) PAINOPISTEESSÄ
(FR) AU CENTRE DE CHARGE
(GA) @ LÓDPHOINTE
(HU) @ TEHER KÖZEPE
(IS) @ HLEÐSLUMIÐJA
(IT) @ BARICENTRO DEL CARICO
(JA) @ 負荷の中心
(KO) @ 하중 중심
(LT) TIES KROVINIO CENTRU
(LV) KRAVAS CENTRĀ
(MT) @ ĊENTRU TAT-TAGĦBIJA
(NL) BIJ LASTZWAARTEPUNT
(NO) VED LASTEPUNKT
(PL) @ ŚRODEK CIĘŻKOŚCI ŁADUNKU
(PT) @ CENTRO DE CARGA
(RO) LA CENTRUL DE GREUTATE
(RU) В ЦЕНТРЕ НАГРУЗКИ
(SK) V ŤAŽISKU NÁKLADU
(SL) @ SREDIŠČE OBREMENITVE
(SV) VID LASTENS MITTPUNKT
(TR) MAKSIMUM KAPASITE
(ZH) 载荷中心

(EN) MAXIMUM OPERATING PRESSURE
(BG) МАКСИМАЛНО РАБОТНО НАЛЯГАНЕ
(CS) MAXIMÁLNÍ PROVOZNÍ TLAK
(DA) MAKSIMALT DRIFTSTRYK
(DE) MAXIMALER BETRIEBSDRUCK
(EL) ΜΕΓΙΣΤΗ ΠΙΕΣΗ ΛΕΙΤΟΥΡΓΙΑΣ
(ES) PRESIÓN DE FUNCIONAMIENTO MÁXIMA
(ET) MAKSIMAALNE TÖÖRÖHK
(FI) MAKSIMITOIMINTAPAINE
(FR) PRESSION DE SERVICE MAXIMALE
(GA) UASBHRÚ OIBRIÚCHÁIN
(HU) MAXIMÁLIS ÜZEMI NYOMÁS
(IS) HÁMARKS VINNUÞRÝSTINGUR
(IT) PRESSIONE MASSIMA DI ESERCIZIO
(JA) 最大運転圧力
(KO) 최대 작동 압력
(LT) MAKSIMALUS EKSPLOATACINIS SLĖGIS
(LV) MAKSIMĀLAIS DARBA SPIEDIENS
(MT) PRESSJONI MASSIMA TAL-OPERAT
(NL) MAXIMUM WERKDRUK
(NO) MAKSIMALT DRIFTSTRYKK
(PL) MAKSYMALNE CIŚNIENIE ROBOCZE
(PT) PRESSÃO MÁXIMA DE FUNCIONAMENTO
(RO) PRESIUNEA DE LUCRU MAXIMĂ
(RU) МАКСИМАЛЬНОЕ РАБОЧЕЕ ДАВЛЕНИЕ
(SK) MAXIMÁLNY PREVÁDZKOVÝ TLAK
(SL) NAJVEČJI DELOVNI TLAK
(SV) MAXIMALT ARBETSTRYCK
(TR) MAKSIMUM İŞLETME BASINCI
(ZH) 最大工作压力

(EN) MASS OF ATTACHMENT
(BG) МАСА НА ПРИСТАВКА
(CS) HMOTNOST PŘÍDAVNÉHO ZAŘÍZENÍ
(DA) UDSTYRS VÆGT
(DE) ANBAUGERÄTGEWICHT
(EL) ΜΑΖΑ ΣΥΝΔΕΔΕΜΕΝΟΥ ΕΞΟΠΛΙΣΜΟΥ
(ES) PESO DEL ACCESORIO
(ET) TÖÖSEADME MASS
(FI) LISÄLAITTEEN PAINO
(FR) MASSE DE L'ACCESSOIRE
(GA) MAIS AN FHEISTIS
(HU) A SZERELÉK TÖMEGE
(IS) FJÖLDI TENGINGA
(IT) MASSA DELL'ATTREZZATURA
(JA) 装備総量
(KO) 부착 크기
(LT) PRIEDO MASĖ
(LV) UZKARES IEKĀRTAS MASA
(MT) PIŻ TAL-ATTACHMENT
(NL) MASSA VAN VOORZETAPPARAAT
(NO) MASSE FOR TILLEGGSUTSTYR
(PL) MASA OSPRZĘTU
(PT) PESO DO ACESSÓRIO
(RO) MASA ECHIPAMENTULUI ATAȘAT
(RU) МАССА НАВЕСНОГО ОБОРУДОВАНИЯ
(SK) HMOTNOSŤ PRÍDAVNÉHO ZARIADENIA
(SL) MASA PRIKLJUČKA
(SV) AGGREGATETS VIKT
(TR) EK DONANIM AĞIRLIĞI
(ZH) 属具质量

(EN) LOST LOAD CENTER DISTANCE
(BG) РАЗСТОЯНИЕ ОТ ЦЕНТЪРА НА ЗАГУБА НА НАТОВАРВАНЕ
(CS) VZDÁLENOST POSUNUTÉHO STŘEDU NÁKLADU
(DA) REDUCERET LASTCENTERAFSTAND
(DE) VERLORENER ABSTAND ZUM LASTMITTELPUNKT
(EL) ΑΠΟΣΤΑΣΗ ΑΠΩΛΕΣΘΕΝΤΟΣ ΚΕΝΤΡΟΥ ΒΆΡΟΥΣ
(ES) DISTANCIA A CENTRO DE CARGA PERDIDA
(ET) KOORMUSE RASKUSKESKME MUUTUS
(FI) KAPASITEETIHUKAN KESKIPESTEEN ETÄISYYS
(FR) DISTANCE CENTRE DE CHARGE PERDUE
(GA) FAD LÓDPHOINTE CAILLTE
(HU) ELVESZETT TEHERKÖZÉPPONT-TÁVOLSÁG
(IS) FJARLÆGÐ GLATAÐS HLEÐSLUMIÐJU
(IT) SPESSORE EFFETTIVO
(JA) 荷重中心消失
(KO) 손실 하중 중심 거리
(LT) ATITOLUSIO APKROVOS CENTRO ATSTUMAS
(LV) ZAUDĒTS ATTĀLUMS LĪDZ SLODZES CENTRAM
(MT) DISTANZA MIĊ-ĊENTRU TAT-TAGĦBIJA MITLUFA
(NL) VERLOREN AFSTAND TOT LASTZWAARTEPUNT
(NO) TAPT LASTEPUNKTAVSTAND
(PL) WIELKOŚĆ PRZESUNIĘCIA ŚRODKA CIĘŻKOŚCI ŁADUNKU
(PT) DISTÂNCIA DO CENTRO DE CARGA PERDIDA
(RO) DISTANȚA LA CENTRUL DE GREUTATE AL SARCINII
(RU) ПОТЕРЯННОЕ РАССТОЯНИЕ ДО ЦЕНТРА НАГРУЗКИ
(SK) ÚBYTOK VYLOŽENIA ŤAŽISKA S PRÍDAVNÝM ZARIADENÍM
(SL) RAZDALJA DO PREMAKNJENEGA SREDIŠČA OBREMENITVE
(SV) FÖRLORAT LASTMITTPUNKTSAVSTÅND
(TR) KAYIP YÜK MERKEZ MESAFESI
(ZH) 荷载损耗中心距离

(EN) CENTER OF GRAVITY TO MOUNT FACE DISTANCE
(BG) ЦЕНТЪР НА ТЕЖЕСТТА СПРЯМО РАЗСТОЯНИЕТО ОТ МОНТАЖНАТА ЧЕЛНА ПОВЪРХНИНА
(CS) VZDÁLENOST STŘEDU NÁKLADU K ČELU RÁMU
(DA) AFSTANDEN MELLEM TYNGDEPUNKT OG MONTERINGSFLADEN
(DE) ABSTAND ZWISCHEN SCHWERPUNKT UND MONTAGEFLÄCHE
(EL) ΑΠΟΣΤΑΣΗ ΚΕΝΤΡΟΥ ΒΑΡΟΥΣ ΑΠΟ ΤΗΝ ΠΡΟΣΟΨΗ ΒΑΣΗΣ
(ES) DISTANCIA DE CENTRO DE GRAVEDAD A CARA DE MONTAJE
(ET) RASKUSKESKME KAUGUS EESMISEST KINNITUSPINNAST
(FI) PAINOPISTEEN ETÄISYYS KIINNITYSPINNASTA
(FR) DISTANCE CENTRE DE GRAVITÉ-FACE DE MONTAGE
(GA) FAD IDIR AN MEÁCHANLÁR AGUS AN ÉADAN FEISTE
(HU) SÚLYPONT - SZERELŐFELÜLET TÁVOLSÁG
(IS) MIÐJA ÞYNGDARAFLS TIL AÐ HLAÐA ÚR LÍKAMSFJARLÆGÐ
(IT) CENTRO DI GRAVITA' DAL PIANO DI AGGANCIO
(JA) マウント面への重心
(KO) 장착 면 거리에 대한 중력 중심
(LT) ATSTUMAS NUO SUNKIO JĖGOS CENTRO IKI PAGRINDO PRIEKINĖS PUSĖS
(LV) ATTĀLUMS NO SMAGUMA CENTRA LĪDZ UZSTĀDĪŠANAS VIRSMAI
(MT) ĊENTRU TA' GRAVITÀ SAD-DISTANZA MOUNT FACE
(NL) AFSTAND TUSSEN ZWAARTEPUNT EN MONTAGEVLAK
(NO) AVSTAND TYNGDEPUNKT TIL MONTERINGSFLATE
(PL) ODLEGŁOŚĆ OD ŚRODKA CIĘŻKOŚCI DO CZOŁA ZAWIESZENIA
(PT) DISTÂNCIA DO CENTRO DE GRAVIDADE À SUPERFÍCIE DE MONTAGEM
(RO) DISTANȚA DE LA CENTRUL DE GREUTATE LA SUPRAFAȚA DE MONTARE
(RU) РАССТОЯНИЕ ОТ ЦЕНТРА ТЯЖЕСТИ ДО УСТАНОВОЧНОЙ ПОВЕРХНОСТИ
(SK) VZDIALENOSŤ ŤAŽISKA OD ČELNEJ STRANY UCHYTENIA
(SL) RAZDALJA TEŽIŠČA OD SPREDNJE MONTAŽNE STRANI
(SV) AVSTÅND TYNGDPUNKT TILL MONTERINGSYTA
(TR) AĞIRLIK MERKEZI ILE FORK YÜZÜ ARASI MESAFE
(ZH) 重心到安装面的距离

(EN) YEAR OF MANUFACTURE
(BG) ГОДИНА НА ПРОИЗВОДСТВО
(CS) ROK VÝROBY
(DA) PRODUKTIONSÅR
(DE) JAHR DER HERSTELLUNG
(EL) ΈΤΟΣ ΚΑΤΑΣΚΕΥΗΣ
(ES) AÑO DE FABRICACIÓN
(ET) VALMISTAMISAASTA
(FI) VALMISTUSVUOSI
(FR) ANNÉE DE FABRICATION
(GA) BLIAIN DÉANTÚSAÍOCHTA
(HU) A GYÁRTÁS ÉVE
(IS) FRAMLEIÐSLUÁR
(IT) ANNO DI FABBRICAZIONE
(JA) 製造年度
(KO) 제조년
(LT) PAGAMINIMO METAI
(LV) RAŽOŠANAS GADS
(MT) SENA TA' MANIFATTURA
(NL) BOUWJAAR
(NO) PRODUKSJONSÅR
(PL) ROK PRODUKCJI
(PT) ANO DE FABRICO
(RO) ANUL DE FABRICAȚIE
(RU) ГОД ИЗГОТОВЛЕНИЯ
(SK) ROK VÝROBY
(SL) LETO IZDELAVE
(SV) TILLVERKNINGSÅR
(TR) ÜRETIM YILI
(ZH) 制造年份

(EN) CAPACITY OF TRUCK AND ATTACHMENT COMBINATION MAY BE LESS THAN ATTACHMENT CAPACITY SHOWN. CONSULT TRUCK NAMEPLATE. THE CAPACITY OF THE TRUCK AND ATTACHMENT COMBINATION SHALL BE COMPLIED WITH.

(BG) КАПАЦИТЕТЪТ НА СЪЕДИНЕНИТЕ ПОВДИГАЧ И ПРИСТАВКА МОЖЕ ДА БЪДЕ ПО-МАЛЪК ОТ ДАДЕНИЯ КАПАЦИТЕТ НА ПРИСТАВКАТА. ВИЖТЕ ТАБЕЛКАТА НА ПОВДИГАЧА. ТОВАРОПОДЕМНОСТТА НА КАРА И КОМБИНАЦИЯТА ОТ ПРИСТАВКИ ТРЯБВА ДА СЪОТВЕТСТВАТ.

(CS) NOSNOST KOMBINACE VOZÍKU S PŘÍDAVNÝM ZAŘÍZENÍM MŮŽE BÝT MENŠÍ NEŽ UVEDENÁ NOSNOST PŘÍDAVNÉHO ZAŘÍZENÍ. PROHLÉDNĚTE SI ŠTÍTEK VOZÍKU. NOSNOST KOMBINACE VOZÍKU A PŘÍDAVNÉHO ZAŘÍZENÍ NESMÍ BÝT PŘEKROČENA.

(DA) DEN SAMLEDE KAPACITET FOR TRUCKEN OG DET PÅMONTEREDE TILBEHØR KAN VÆRE MINDRE END DEN VISTE KAPACITET FOR TILBEHØRET. SE TRUCKENS NAVNEPLADE. KOMBINATIONEN AF TRUCKENS KAPACITET OG TILBEHØRET SKAL OVERHOLDES.

(DE) DIE TRAGKRAFT DER KOMBINATION AUS STAPLER UND ANBAUGERÄT KANN GERINGER SEIN ALS DIE ANGEGEBENE NENNTRAGFÄHIGKEIT. SIEHE TYPENSCHILD. DIE TRAGFÄHIGKEIT DER STAPLER-ANBAUGERÄT-KOMBINATION MUSS DAMIT ÜBEREINSTIMMEN.

(EL) Η ΧΩΡΗΤΙΚΟΤΗΤΑ ΤΟΥ ΟΧΗΜΑΤΟΣ ΚΑΙ ΣΥΝΔΥΑΣΜΟΥ ΕΞΑΡΤΗΜΑΤΩΝ ΕΝΔΕΧΕΤΑΙ ΝΑ ΕΙΝΑΙ ΧΑΜΗΛΟΤΕΡΗ ΑΠΟ ΤΗ ΧΩΡΗΤΙΚΟΤΗΤΑ ΤΟΥ ΕΞΑΡΤΗΜΑΤΟΣ ΣΤΟ ΠΑΡΑΔΕΙΓΜΑ. ΣΥΜΒΟΥΛΕΥΤΕΙΤΕ ΤΗΝ ΕΤΙΚΕΤΑ ΟΧΗΜΑΤΟΣ. Η ΙΚΑΝΌΤΗΤΑ ΤΟΥ ΟΧΗΜΑΤΟΣ ΚΑΙ ΤΟΥ ΣΥΝΔΕΔΕΜΈΝΟΥ ΕΞΟΠΛΙΣΜΟΎ ΠΡΈΠΕΙ ΝΑ ΕΊΝΑΙ ΣΥΜΒΑΤΕΣ.

(ES) LA CAPACIDAD COMBINADA DE CARRETILLA Y ACCESORIO PUEDE SER MENOR QUE LA CAPACIDAD DEL ACCESORIO INDICADA. CONSULTE LA PLACA DE CARACTERÍSTICAS DE LA CARRETILLA. DEBE CUMPLIRSE LA CAPACIDAD COMBINADA DE CARRETILLA Y ACCESORIO.

(ET) LAADURI JA TÖÖSEADME KOMBINATSIOONI JÕUDLUS VÕIB OLLA VÄIKSEM KUI TÖÖSEADME NÄIDATUD JÕUDLUS. VAADAKE LAADURI ANDMEPLAATI. LAADUR JA TÖÖSEADE PEAVAD OLEMA ÜKSTEISEGA VASTAVUSES.

(FI) TRUKKI- JA LISÄLAITEYHDISTELMÄN KAPASITEETTI VOI OLLA PIENEMPI KUIN LISÄLAITTEEN ILMOITETTU KAPASITEETTI. KS. TRUKIN ARVOKILPI. TRUKIN JA LISÄLAITTEEN YHDISTELMÄN NOSTOKYKYÄ ON NOUDATETTAVA.

(FR) LA CAPACITE DE LA COMBINAISON CHARIOT/ACCESSOIRE PEUT S'AVERER INFERIEURE A CELLE INDIQUEE POUR L'ACCESSOIRE. SE REPORTER A LA PLAQUE SIGNALETIQUE DU CHARIOT. RESPECTER LA CAPACITÉ DU CHARIOT ET DE L'ACCESSOIRE COMBINÉS.

(GA) D'FHÉADFADH NÍOS LÚ CUMAIS A BHEITH AG AN TRUCAIL AGUS FEISTEAS NÁ AN CUMAS FEISTIS A THAISPEÁNTAR. FÉACH AR AINMCHLÁR NA TRUCAILE. CLOÍFEAR LE CUMAS NA TRUCAILE AGUS AN CHOMHCHEANGAL FEISTIS.

(HU) A TARGONCA ÉS A TARTOZÉK KOMBINÁCIÓ KAPACITÁSA LEHET, HOGY KEVESEBB, MINT AZ ÁBRÁZOLT TARTOZÉK KAPACITÁSA. LÁSD A TARGONCA ADATTÁBLÁN. A TARGONCA ÉS SZERELÉK KOMBINÁCIÓ TEHERBÍRÁSÁNAK ELEGET KELL TENNIE ENNEK.

(IS) GETA VÖRUBÍLS OG VIÐHENGISVIÐBÓTAR GETUR VERIÐ MINNI EN GETA VIÐHENGIS ER SÝND. RÁÐFÆRIÐ YKKUR VIÐ NAFNASKILTI VÖRUBÍLSINS. ÞAÐ Á AÐ FYLGJA GETU VÖRUBÍLSINS OG VIÐHENGISVIÐBÓTINNI.

(IT) LA PORTATA DELLA COMBINAZIONE CARRELLO/ATTREZZATURE PUÒ ESSERE INFERIORE RISPETTO ALLA PORTATA DELLE ATTREZZATURE DICHIARATA. CONSULTARE LA TARGHETTA DEL CARRELLO. DEVE ESSERE RISPETTATA LA PORTATA DELLA COMBINAZIONE CARRELLO ELEVATORE/ATTREZZATURA.

(JA) フォークリフトの能力と装備の組み合わせは示されている装備の能力より低い場合があります。 フォークリフトのネームプレートを相談. トラックの容量と装備の組み合わせとは実施済み。.

(KO) 트럭 및 부착 결합물의 용량은 표시된 부착물 용량보다 적을 수 있습니다. 트럭 명판을 참조하십시오. 트럭 및 부착물 결합의 용량을 준수해야 합니다.

(LT) KRAUTUVO IR PRIEDO DERINIO GALINGUMAS GALI BŪTI MAŽESNIS NEGU NURODYTAS PRIEDO GALINGUMAS. SKAITYKITE INFORMACIJĄ KRAUTUVO INFORMACINĖJE PLOKŠTELĖJE. BŪTINA NEVIRŠYTI KRAUTUVO IR PRIEDO DERINIO GALIOS.

(LV) AUTOIEKRĀVĒJA UN PIEDERUMA KOPĒJĀ CELTSPĒJA VAR BŪT MAZĀKA PAR NORĀDĪTO PIEDERUMA CELTSPĒJU. SKATĪT AUTOIEKRĀVĒJA TEHNISKO DATU PLĀKSNĪTI. IR JĀIEVĒRO AUTOIEKRĀVĒJA UN UZKARES IEKĀRTAS KOPĒJĀ CELTSPĒJA.

(MT) IL-KAPAĊITÀ TAT-TRAKK U TAT-TAGĦMIR IMQABBAD MIEGĦU TISTA' TKUN INQAS MILL-KAPAĊITÀ MURIJA TAT-TAGĦMIR IMQABBAD MIEGĦU. IĊĊEKKJA L-PJANĊA TAL-ISEM TAT-TRAKK. IL-KAPAĊITÀ TAT-TRAKK FLIMKIEN MA' DIK TAT-TAGĦMIR IMQABBAD MIEGĦU TRID TIĠI SSODISFATA.

(NL) HET DRAAGVERMOGEN VAN DE COMINATIE VAN HEFTRUCK EN VOORZETAPPARAAT KAN LAGER ZIJN DAN HET VERMELDE DRAAGVERMOGEN VAN HET VOORZETAPPARAAT. KIJK OP HET TYPEP LAATJE VAN DE HEFTRUCK. MET DE CAPACITEIT VAN DE COMBINATIE VAN TRUCK EN VOORZETAPPARAAT WORDT REKENING GEHOUDEN.

(NO) TOTAL KOMBINERT KAPASITET FOR GAFFELTRUCK OG TILBEHØR KAN VÆRE MINDRE ENN ANGITT KAPASITET FOR TILBEHØRET. SE GAFFELTRUCKENS NAVNEPLATE. DEN TOTALE KAPASITETEN FOR GAFFELTRUCK OG TILLEGGSUTSTYR KOMBINERT MÅ OVERHOLDES.

(PL) UDŹWIG ZESPOŁU WÓZKA I OSPRZĘTU MOŻE BYĆ MNIEJSZY NIŻ POKAZANY UDŹWIG OSPRZĘTU. PATRZ TABLICZKA ZNAMIONOWA WÓZKA. NALEŻY PRZESTRZEGAĆ DOPUSZCZALNEGO UDŹWIGU ZESPOŁU WÓZKA I OSPRZĘTU.

(PT) A CAPACIDADE DA COMBINAÇÃO DO EMPILHADOR E DO ACESSÓRIO PODE SER INFERIOR À CAPACIDADE DO ACESSÓRIO APRESENTADA. CONSULTE A CHAPA DE ESPECIFICAÇÕES DO EMPILHADOR. CAPACIDADE DO CAMINHÃO E COMBINAÇÃO DE PENHORA DEVE SER RESPEITADO.

(RO) CAPACITATEA VEHICULULUI ȘI A COMBINAȚIEI DISPOZITIVELOR DE PRINDERE POATE FI MAI MICĂ DECÂT CAPACITATEA DISPOZITIVELOR DE PRINDERE INDICATĂ. CONSULTAȚI PLĂCUȚA CU CARACTERISTICILE TEHNICE ALE STIVUITORULUI. CAPACITATEA COMBINAȚIEI STIVUITOR - ECHIPAMENTE ATAȘATE TREBUIE RESPECTATĂ.

(RU) СОВМЕСТНАЯ ГРУЗОПОДЪЕМНОСТЬ АВТОПОГРУЗЧИКА И НАВЕСНОГО УСТРОЙСТВА МОЖЕТ БЫТЬ НИЖЕ УКАЗАННОЙ ГРУЗОПОДЪЕМНОСТИ НАВЕСНОГО УСТРОЙСТВА. СМ. ТАБЛИЧКУ ТЕХНИЧЕСКИХ ДАННЫХ. НЕОБХОДИМО СОБЛЮДАТЬ КОМБИНИРОВАННУЮ ГРУЗОПОДЪЕМНОСТЬ АВТОПОГРУЗЧИКА И НАВЕСНОГО ОБОРУДОВАНИЯ.

(SK) NOSNOSŤ VOZÍKA A PRÍDAVNÉHO ZARIADENIA MÔŽE BYŤ MENŠIA AKO UVEDENÁ NOSNOSŤ PRÍDAVNÉHO ZARIADENIA. BLIŽŠIE INFORMÁCIE UVEDENÉ NA TYPOVOM ŠTÍTKU VOZÍKA. NOSNOSŤ VOZÍKA S PRÍDAVNÝM ZARIADENÍM BUDE DODRŽANÁ.

(SL) ZMOGLJIVOST KOMBINACIJE VILIČARJA IN OPREME JE LAHKO MANJŠA OD PRIKAZANE ZMOGLJIVOSTI OPREME. UPOŠTEVAJTE NAPISNO PLOŠČICO VILIČARJA. UPOŠTEVATI JE POTREBNO ZMOGLJIVOST KOMBINACIJE VILIČARJA IN OPREME.

(SV) KAPACITETEN FÖR KOMBINATIONEN GAFFELTRUCK OCH AGGREGAT KAN VARA MINDRE ÄN ANGIVEN KAPACITET. LÄS GAFFELTRUCKENS TYPSKYLT. KAPACITETEN FÖR KOMBINATIONEN GAFFELTRUCK OCH AGGREGAT SKA FÖLJAS.

(TR) ARAÇ KAPASITESI VE DONANIM KOMBINASYONU, GÖSTERILEN DONANIM KAPASITESINDEN DÜŞÜK OLABILIR. ARAÇ BILGI ETIKETINE BAŞVURUN. ARAÇ KAPASITESI VE DONANIM KOMBINASYONU UYUMLU OLMALIDIR.

(ZH) 叉车与叉车属具的综合承载能力可能小于显示的叉车属具承载能力。请参考叉车铭牌。应符合叉车与叉车属具的综合承载能力。

BLANK

Do you have questions you need answered right now? Call your nearest Cascade Service Department.
Visit us online at www.cascorp.com

AMERICAS

Cascade Corporation
U.S. Headquarters
2201 NE 201st
Fairview, OR 97024-9718
Tel: 800-CASCADE (227-2233)
Fax: 888-329-8207

Cascade Canada Inc.
5570 Timberlea Blvd.
Mississauga, Ontario
Canada L4W-4M6
Tel: 905-629-7777
Fax: 905-629-7785

Cascade do Brasil
Praça Salvador Rosa,
131/141-Jordanópolis,
São Bernardo do Campo - SP
CEP 09891-430
Tel: 55-13-2105-8800
Fax: 55-13-2105-8899

EUROPE-AFRICA

Cascade Italia S.R.L.
European Headquarters
Via Dell'Artigianato 1
37030 Vago di Lavagno (VR)
Italy
Tel: 39-045-8989111
Fax: 39-045-8989160

Cascade (Africa) Pty. Ltd.
PO Box 625, Isando 1600
60A Steel Road
Sparton, Kempton Park
South Africa
Tel: 27-11-975-9240
Fax: 27-11-394-1147

ASIA-PACIFIC

Cascade Japan Ltd.
2-23, 2-Chome,
Kukuchi Nishimachi
Amagasaki, Hyogo
Japan, 661-0978
Tel: 81-6-6420-9771
Fax: 81-6-6420-9777

Cascade Korea
121B 9L Namdong Ind.
Complex, 691-8 Gojan-Dong
Namdong-Ku
Inchon, Korea
Tel: +82-32-821-2051
Fax: +82-32-821-2055

Cascade-Xiamen
No. 668 Yangguang Rd.
Xinyang Industrial Zone
Haicang, Xiamen City
Fujian Province
P.R. China 361026
Tel: 86-592-651-2500
Fax: 86-592-651-2571

Cascade India Material Handling P Ltd
Sy no 271/8, Ingawale Patil Estate,
Godown No.9,10 & 11, Bhugaon,
Off Paud Road, Tal Mulshi, Dist
Pune 411 042

Cascade Australia Pty. Ltd.
1445 Ipswich Road
Rocklea, QLD 4107
Australia
Tel: 1-800-227-223
Fax: +61 7 3373-7333

Cascade New Zealand
15 Ra Ora Drive
East Tamaki, Auckland
New Zealand
Tel: +64-9-273-9136
Fax: +64-9-273-9137

Sunstream Industries Pte. Ltd.
18 Tuas South Street 5
Singapore 637796
Tel: +65-6795-7555
Fax: +65-6863-1368

07-2018
Part Number 6095756-R2