Parts Manual

Model Push/Pull

Serial Number 35E-PPS-A003R2

cascade® corporation

For Technical Assistance call: 800-227-2233, Fax: 888-329-8207
To Order Parts call: 888-227-2233, Fax: 888-329-0234
OR
Write: Cascade Corporation, P.O. Box 20187, Portland, OR 97220
Internet: www.cascorp.com

Publications

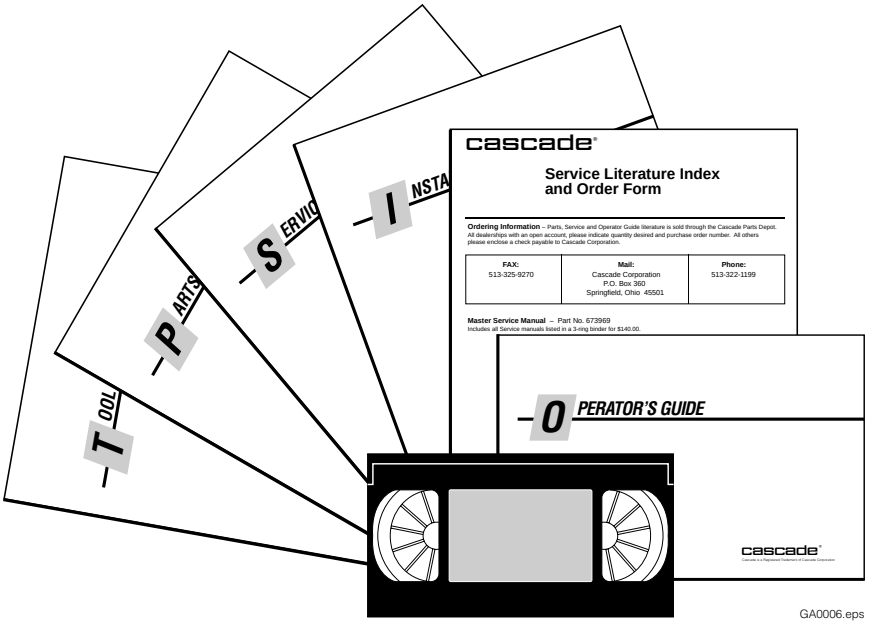

GA0006.eps

PART NO.	DESCRIPTION
	Parts Manual
686455	Service Manual
684945	Operators Guide
685531	Operators Pocket Guide
684944	Installation Instructions
680664	Servicing Cascade Cylinders-VHS
679929	Tool Catalog
673964	Literature Index Order Form

Decals

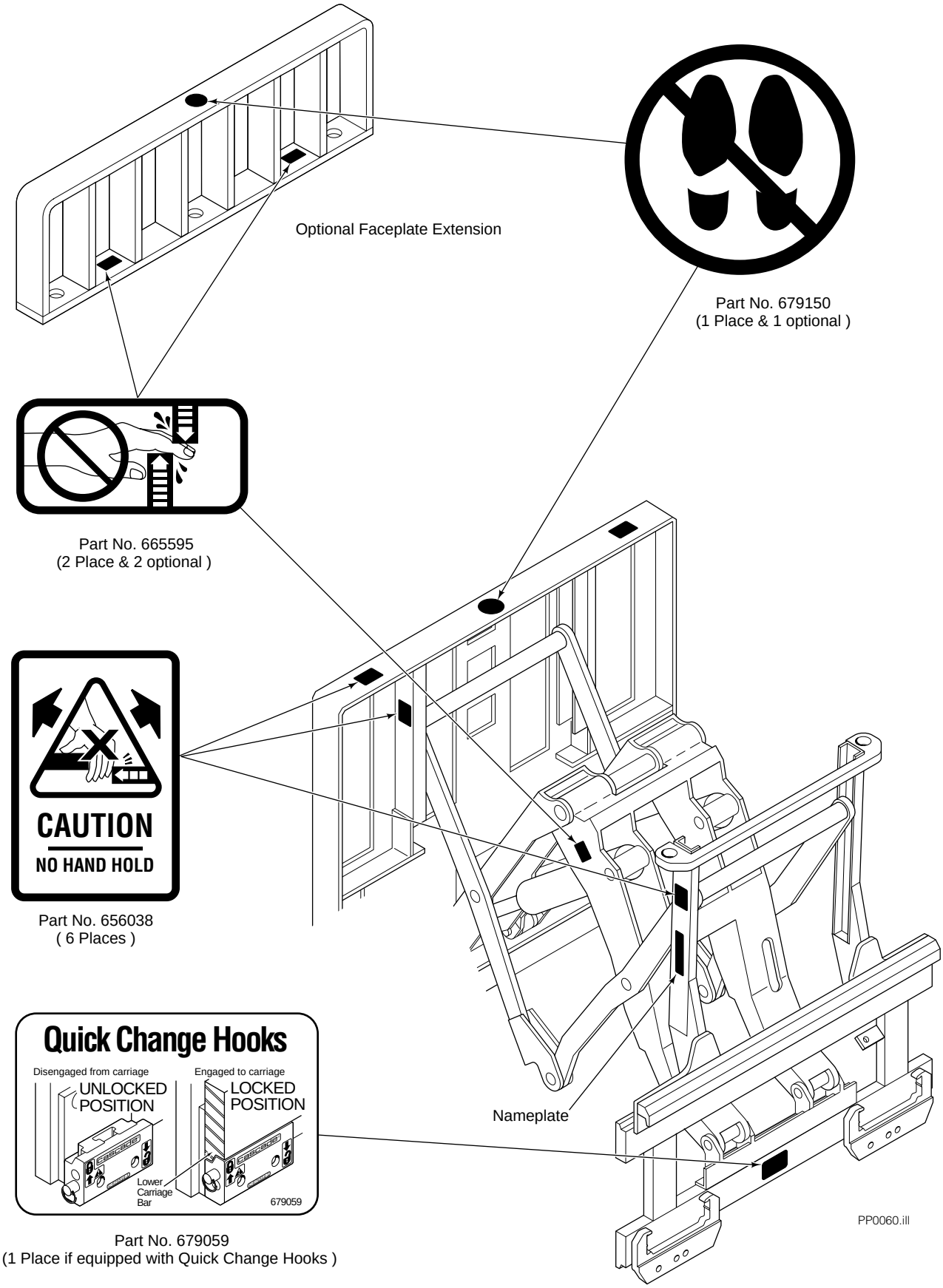
Optional Faceplate Extension
Part No. 679150
(1 Place & 1 optional)
Part No. 665595
(2 Place & 2 optional)
CAUTION
NO HAND HOLD
Part No. 656038
(6 Places)
Quick Change Hooks
Disengaged from carriage
UNLOCKED POSITION
Engaged to carriage
LOCKED POSITION
Lower Carriage Bar
679059
Part No. 679059
(1 Place if equipped with Quick Change Hooks)
Nameplate
PP0060.ill

Platen Group

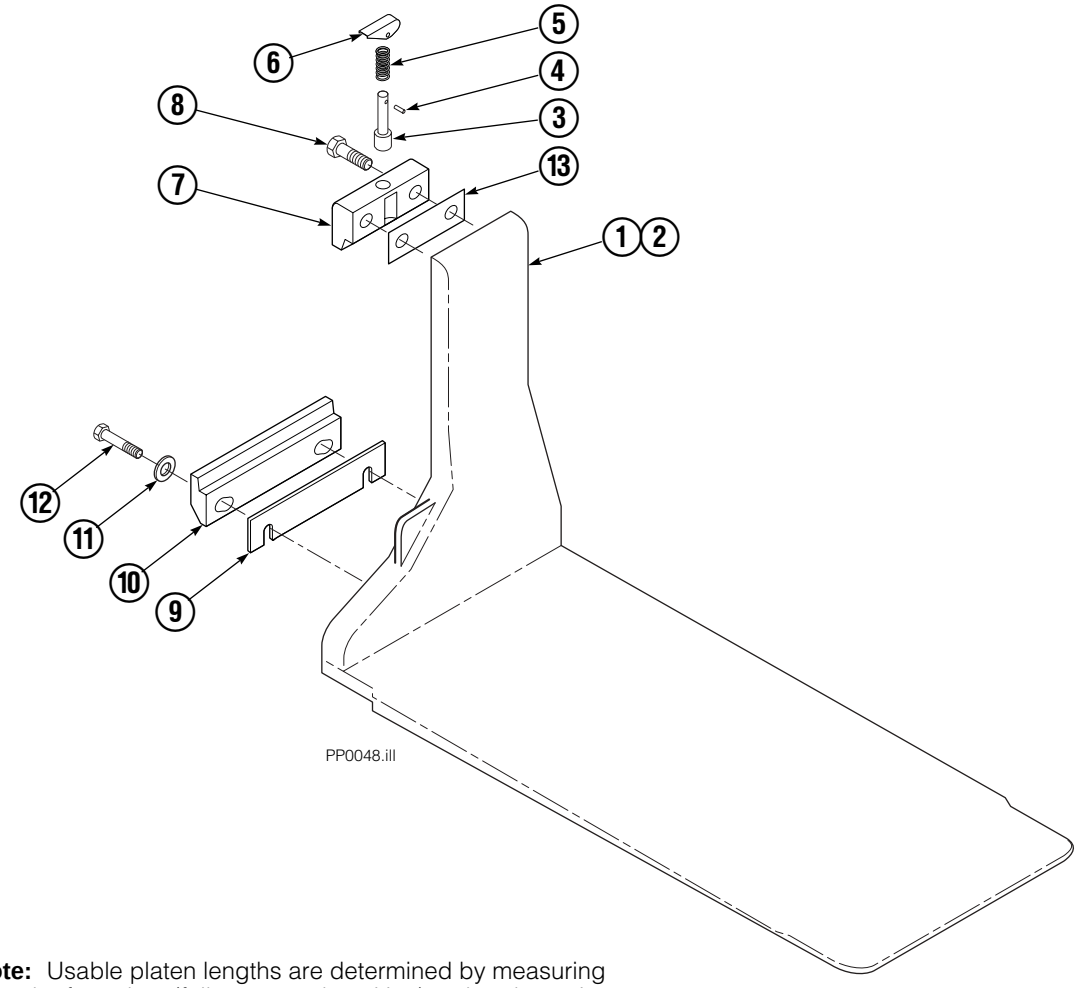

Note: Usable platen lengths are determined by measuring from the faceplate (fully retracted position) to the platen tip or total platen length minus 4 1/2".

REF	QTY	PART NO.	DESCRIPTION
		685751	Platen Group
1	1	685752	Platen – LH
2	1	685753	Platen – RH
3	2	622907	■ Pin
4	2	8007	■ Rivet
5	2	622908	■ Spring
6	2	622897	■ Handle
7	2	685533	■ Upper Hook
8	4	685677	Capscrew
9	✯	206969	Shim (.030)
10	2	682851	Lower Hook
11	4	667225	Washer
12	4	779009	Capscrew
13	●	688379	Shim (.060)

✯ As required.

● As required (2 maximum).

■ Included in Upper Hook Assembly 688386.

Reference: S-3408.

Frame Group ITA II

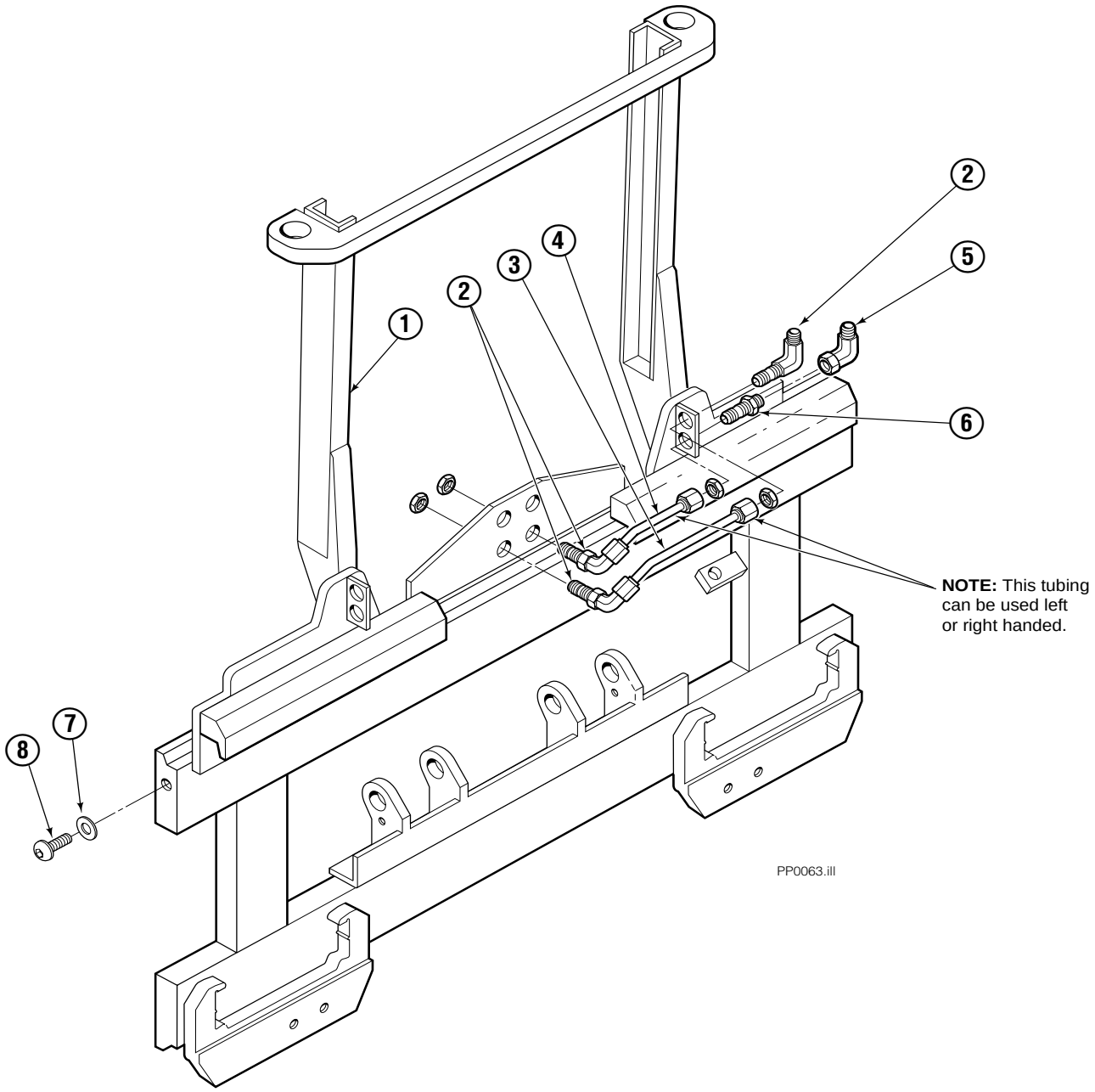

35E/45E			
REF	QTY	PART NO.	DESCRIPTION
		204649	Frame Group
1	1	204651	Frame
2	3	2453	Fitting, 6-6
3	1	686509	Tube
4	1	686510	Tube
5	1	2680	Fitting, 6-6
6	1	2375	Fitting, 6-6
7	2	683001	Washer
8	2	683142	Capscrew

S/S Mounting Group ITA II

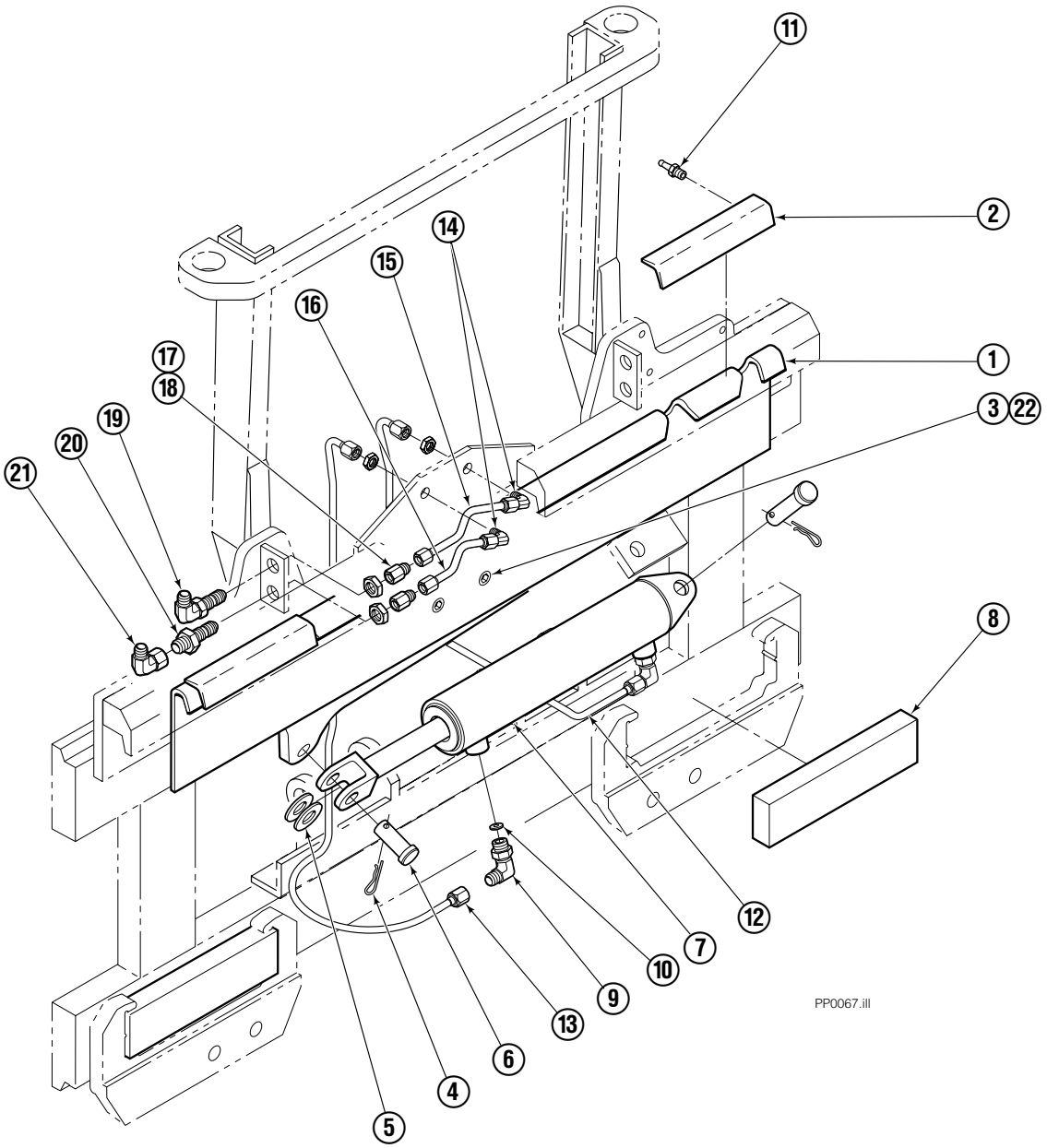

35E/45E							
REF	QTY	PART NO.	DESCRIPTION	REF	QTY	PART NO.	DESCRIPTION
		682833	Mounting Group	12	1	686511	Tube
1	1	682554	Anchor Bracket	13	1	686512	Tube
2	2	671165	■ Bearing Segment	14	2	2451	Fitting, 4-4
3	2	768759	Setscrew	15	1	686515	Tube
4	2	6517	Cotter Pin	16	1	686516	Tube
5	2	6234	Washer	17	2	2669	Fitting, 4-6
6	2	678525	Clevis Pin	18	2	2617	Fitting, 6-6
7	1	675548	● Cylinder	19	1	2453	Fitting, 6-6
8	2	682814	Bearing	20	1	2375	Fitting, 6-6
9	2	666984	Fitting, 4-6	21	1	2680	Fitting, 6-6
10	2	675550	Washer	22	2	688387	Jam Nut
11	4	7403	■ Grease Fitting				

■ Included in Bearing Service Kit 671423.

● See Cylinder page for parts breakdown.

Sideshift Cylinder

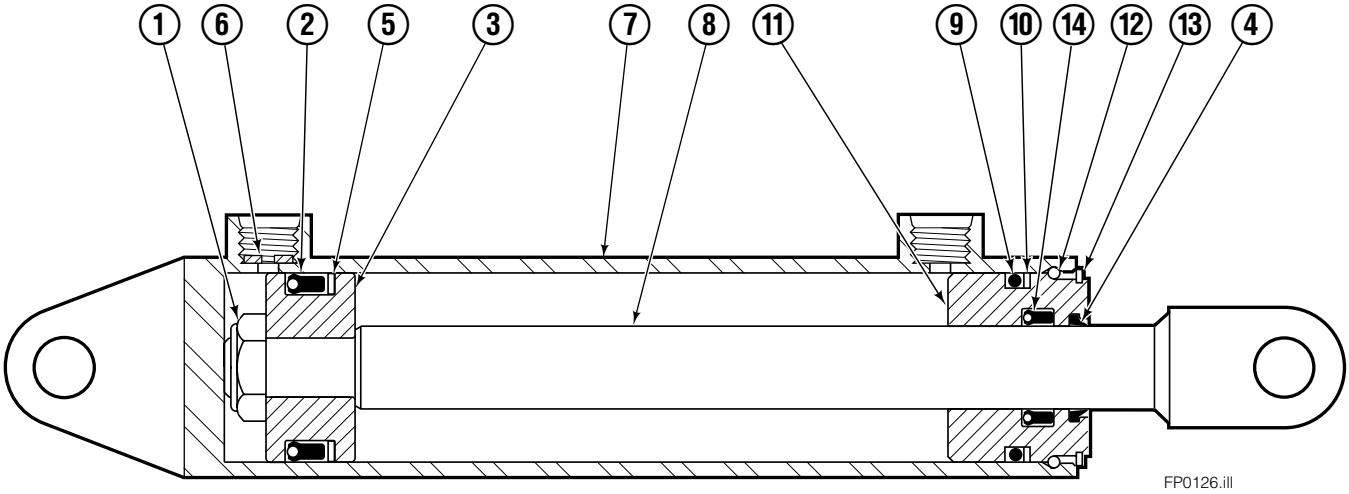

35E			
REF	**QTY**	**PART NO.**	**DESCRIPTION**
		675548	Cylinder Assembly
1	1	553857	Nut
2	1	662452	■ Seal
3	1	553501	Piston
4	1	636851	■ Wiper
5	1	638247	■ Back-up Ring
6	1	675550	Washer (orifice .085 in.)
7	1	675549	Shell
8	1	553449	Rod
9	1	2785	■ O-Ring
10	1	615128	■ Back-up Ring
11	1	553500	Retainer
12	1	553856	Retaining Ring
13	1	7202	Snap Ring
14	1	641835	■ Seal
		553861	Service Kit

■ Included in Service Kit 553861.

Bolt-On Lower Hook Group ITA II

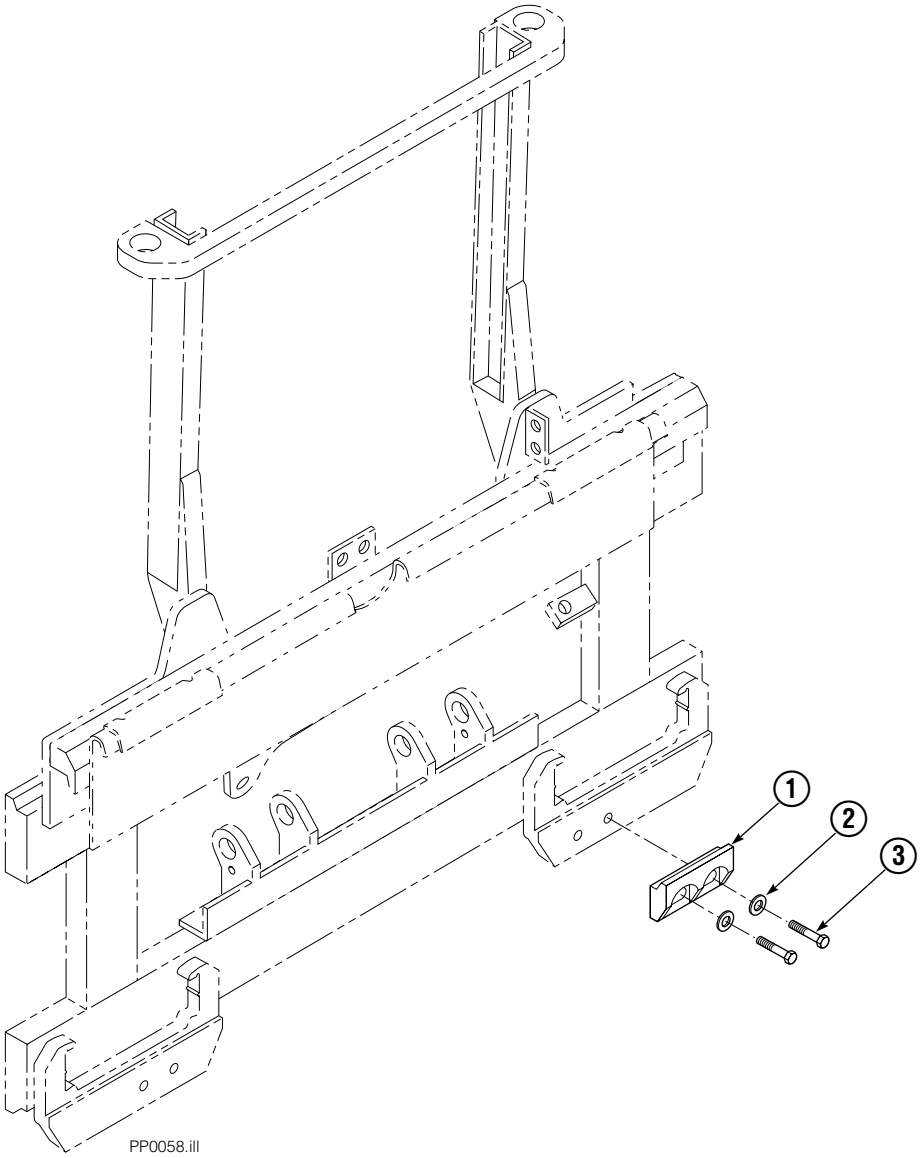

REF	QTY	PART NO.	DESCRIPTION
		683178	Lower Hook Group ITA II
1	2	679360	Hook
2	4	667225	Washer
3	4	779010	Capscrew

Cylinder

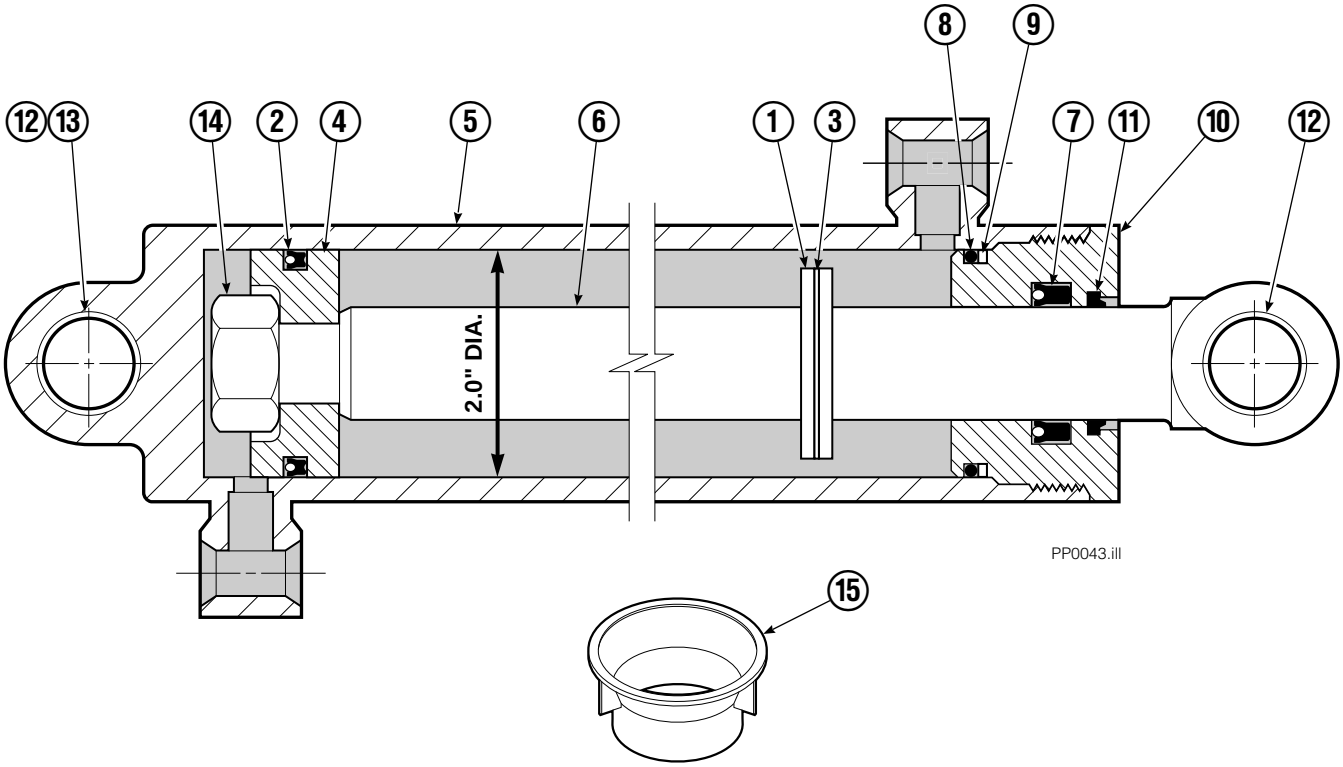

REF	QTY	PART NO.	DESCRIPTION
		582635	Cylinder Assembly
1	1	—	Spacer
2	1	562552	■ Seal
3	1	7348	Snap Ring
4	1	562334	Piston
5	1	562716	Shell
6	1	558626	Rod
7	1	559705	■ Seal
8	1	2785	■ O-Ring
9	1	615128	■ Back-Up Ring
10	1	559696	Retainer
11	1	636853	■ Wiper
12	4	559697	Bearing
13	1	559698	Spacer
14	1	678019	Nut
15	1	671047	■ Seal Loader Kit

■ Included in Service Kit 562338.

Reference: S-3424.

Mechanism Group

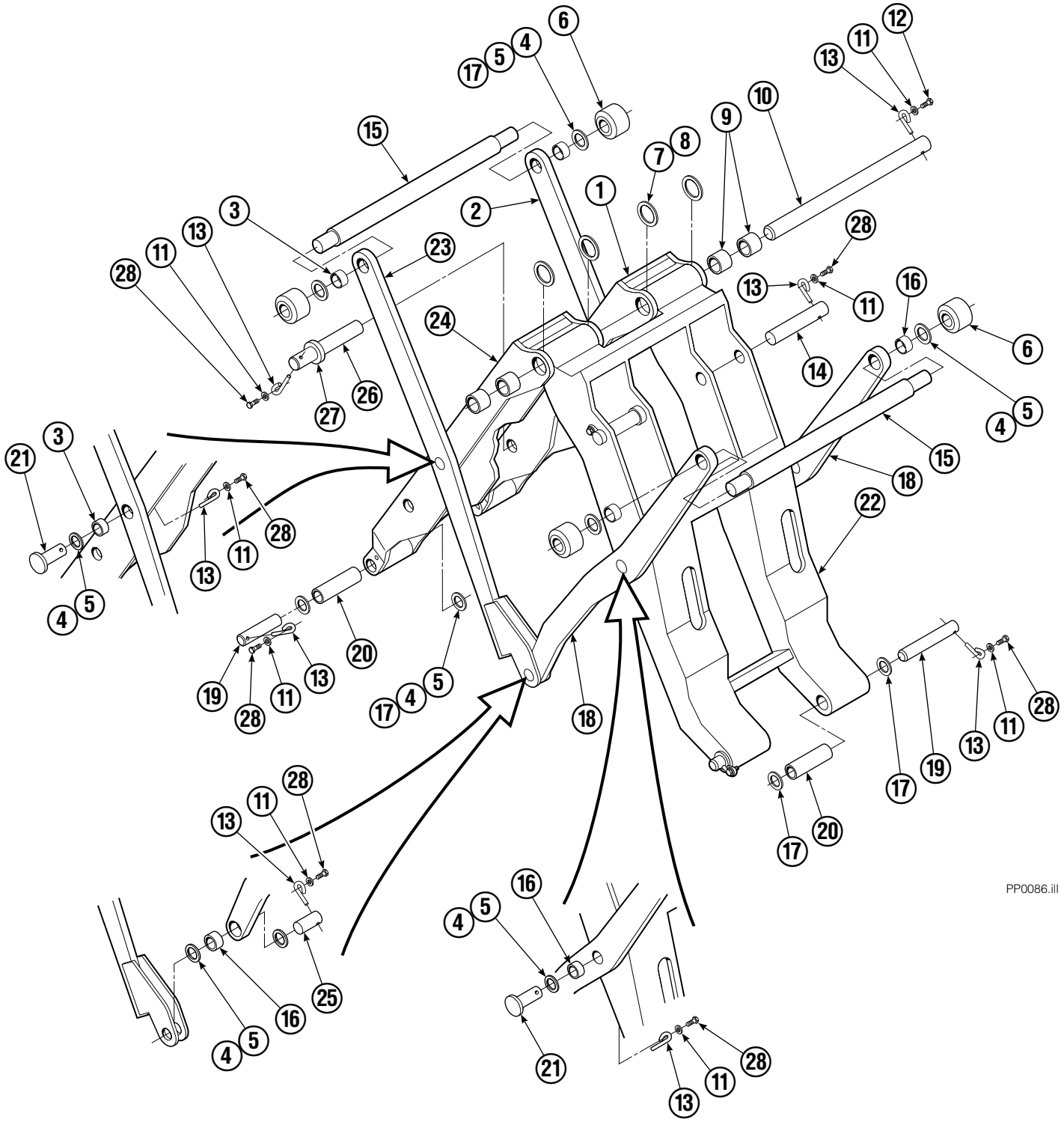

Mechanism Group

35E/45E			
REF	**QTY**	**PART NO.**	**DESCRIPTION**
		204644	Mechanism Group
1	1	204691	Arm-Inner Secondary R. H.
2	1	204692	Arm-Secondary Outer R. H.
3	4	683154	■ Bushing
4	●	683161	Shim (.030)
5	●	683162	Shim (.060)
6	4	205070	Roller
7	●	683163	Shim (.030)
8	●	683164	Shim (.060)
9	4	683155	■ Bushing
10	1	682821	Pin
11	15	6229	Washer
12	2	685661	Capscrew
13	15	682999	Eye-Pin
14	2	682822	Pin-Head
15	2	205065	Pin
16	6	683153	■ Bushing
17	●	204532	Shim (.12)
18	2	204694	Arm-Outer Primary
19	4	204533	Pin-Frame
20	4	204535	■ Bushing
21	4	204695	Pin
22	1	204604	Arm-Inner Primary
23	1	204693	Arm-Secondary Outer L. H.
24	1	204690	Arm-Inner Secondary L. H.
25	2	204696	Pin-Outer
26	2	682823	Pin-Rod
27	2	683165	Spacer
28	13	767961	Capscrew

● Quantity as required.

■ Included in Bushing Service Kit 205075.

Hydraulic Group

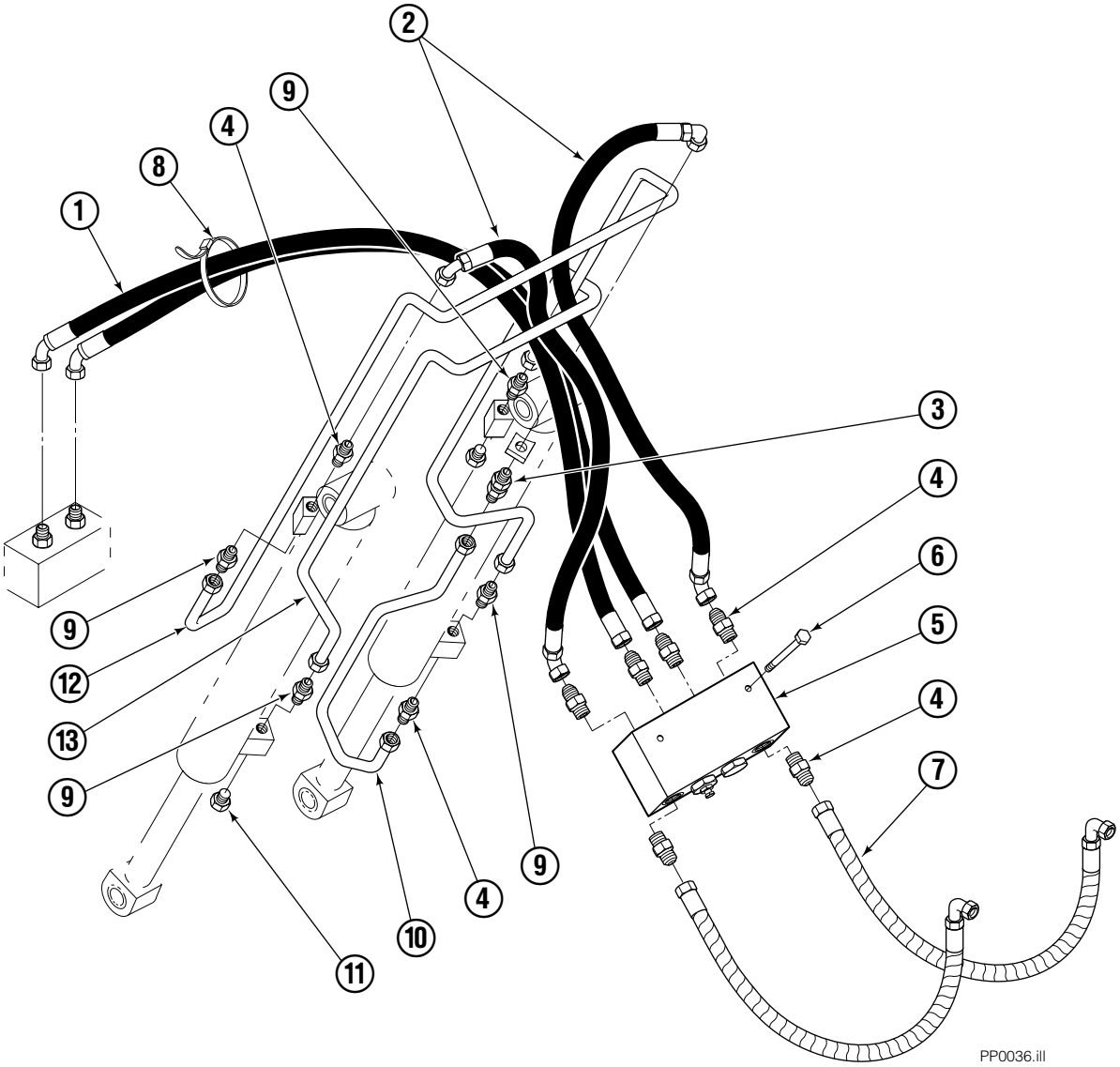

35E/45E			
REF	**QTY**	**PART NO.**	**DESCRIPTION**
		685828	Hydraulic Group ITA II
1	1	685831	Hose
2	2	683173	Hose
3	1	2375	Fitting, 6-6
4	8	604511	Fitting, 6-6
5	1	682812	■ Valve
6	2	765329	Capscrew, M8x1.25x20-8.8
7	2	685978	Hose ITA II
8	2	684956	Cable tie
9	4	605235	Fitting 5-6
10	1	200647	Tube
11	2	604510	Plug, 6
12	1	200649	Tube
13	1	200648	Tube

■ See Valve page for parts breakdown.

Valve
Load Push/Pull

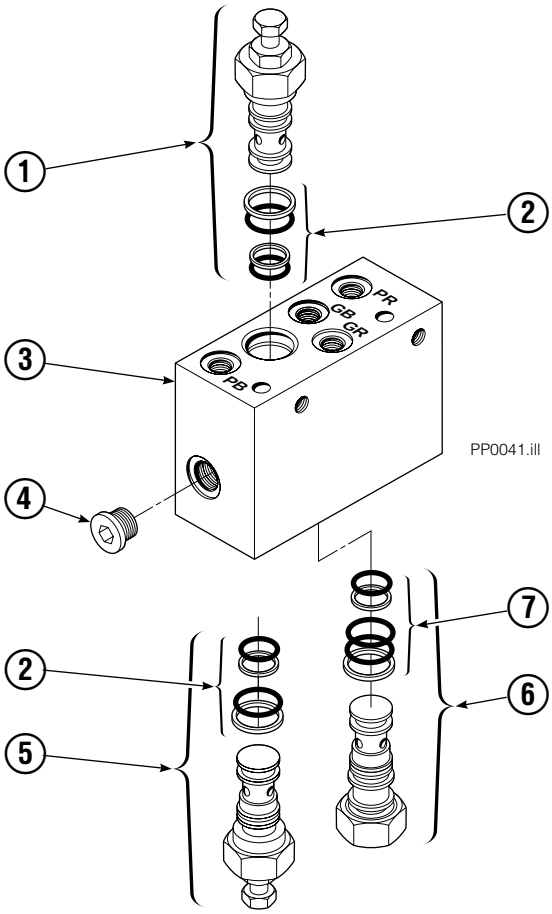

REF	QTY	PART NO.	DESCRIPTION
		682812	Valve Assembly
1	1	677125	Sequence Valve (Retract)
2	2	669597	Service Kit
3	1	682813	Body
4	5	663694	Fitting, 3
5	1	677124	Sequence Valve (Extend)
6	1	659058	Gripper Check Valve
7	1	667516	Service Kit

Faceplate Group

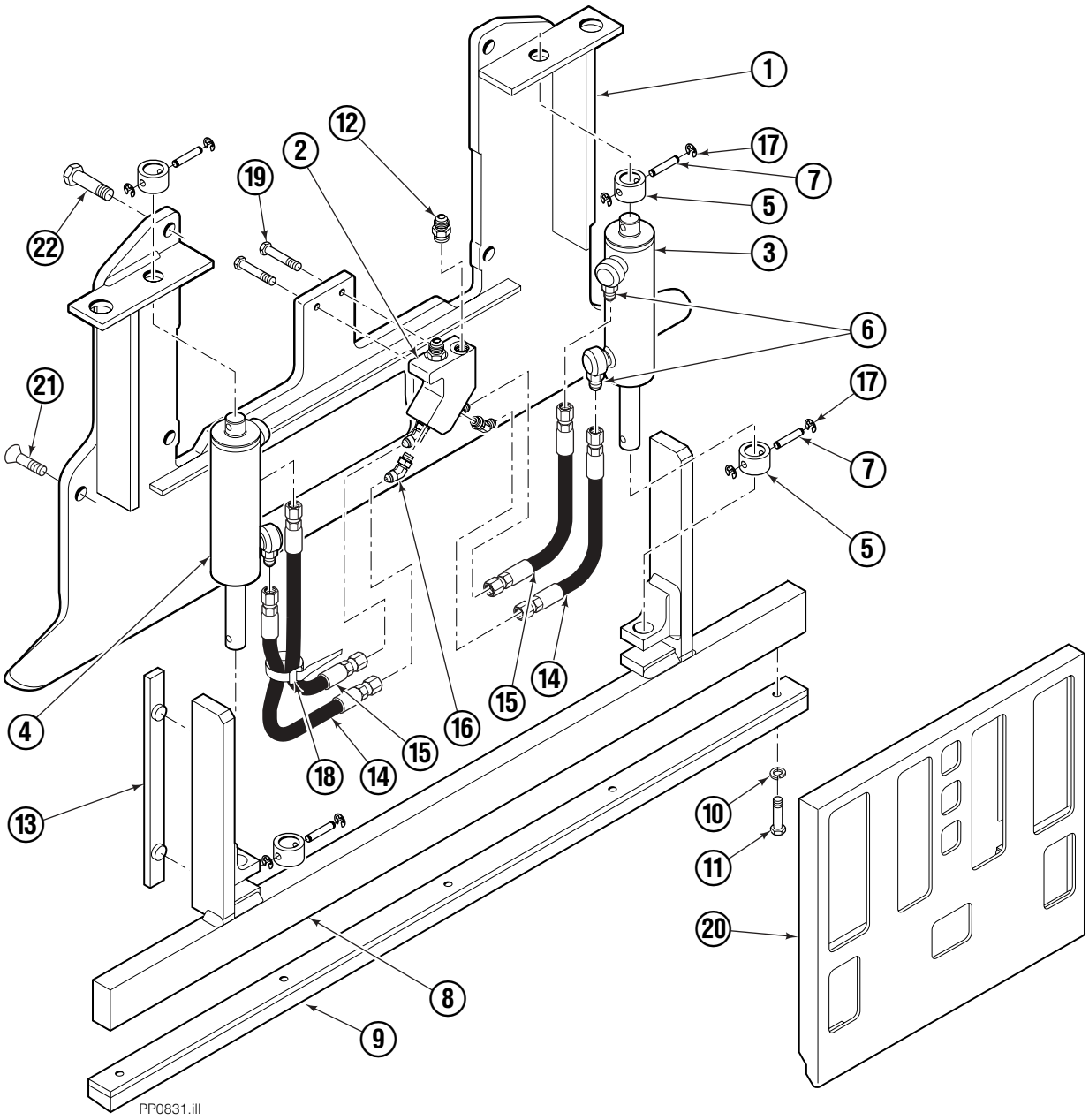

45E							
REF	QTY	PART NO.	DESCRIPTION	REF	QTY	PART NO.	DESCRIPTION
		6019140	Faceplate Group, 40 x 40 in. ■	11	5	787375	Capscrew, M8 x 20
		6020440	Gripper Jaw Assembly ●	12	2	604511	Fitting, 6-6
1	1	206396	Gripper Jaw	13	2	686573	Bearing
2	1	6002134	Valve	14	2	6002138	Hose, 315 mm
3	1	6020444	Gripper Cylinder, LH ◆	15	2	6002139	Hose, 450 mm
4	1	6020443	Gripper Cylinder, RH ◆	16	4	617918	Fitting, 4-4
5	4	6020462	Collar	17	8	669894	Retaining Ring
6	4	617915	Fitting, 4-4	18	4	684956	Wire Tie
7	4	6014089	Pin	19	2	787373	Capscrew, M8 x 20
8	1	6002135	Gripper Bar	20	1	6002142	Faceplate, 40 x 40 in. ■
9	1	672712	Gripper Pad	21	2	768714	Capscrew, M16 x 60
10	5	680253	Lockwasher, M8	22	4	225346	Capscrew, M16 x 60

■ Width x height.

● Includes items 1-19.

◆ See Gripper Cylinder page for parts breakdown.

Gripper Cylinder
Left Hand

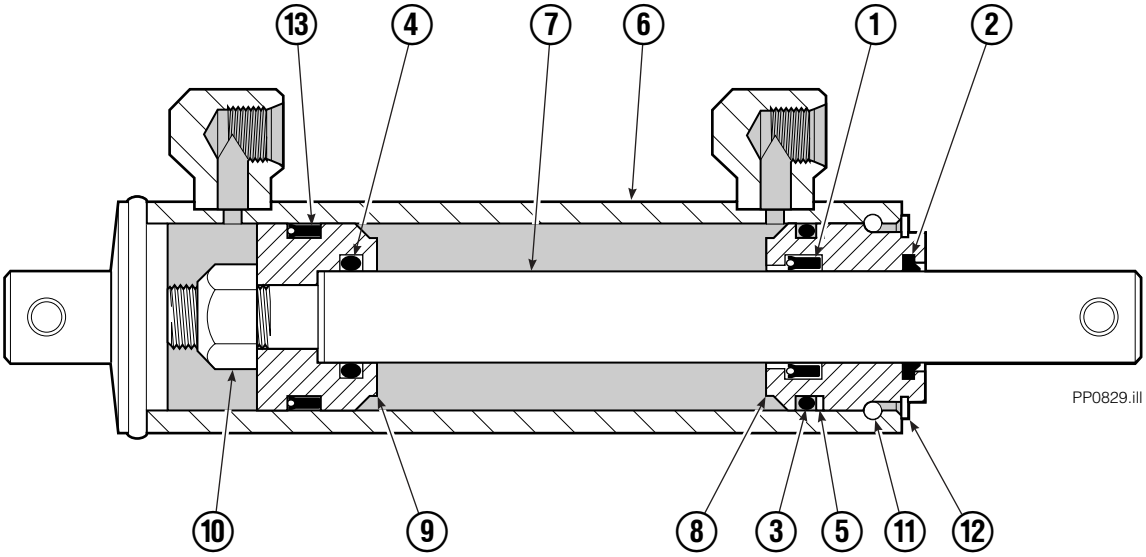

REF	QTY	PART NO.	DESCRIPTION
		6020444	Gripper Cylinder – LH
1	1	646540	▼ Seal
2	1	636850	▼ Wiper
3	1	2718	▼ O-Ring
4	1	2710	▼ O-Ring
5	1	615122	▼ Back-Up Ring
6	1	6020453	Shell
7	1	6020461	Rod
8	1	685664	Retainer
9	1	685665	Piston
10	1	563462	Nut
11	1	563916	Ring
12	1	3137	Ring
13	1	663728	▼ Piston Seal

▼ Included in Service Kit 684827.

Gripper Cylinder
Right Hand

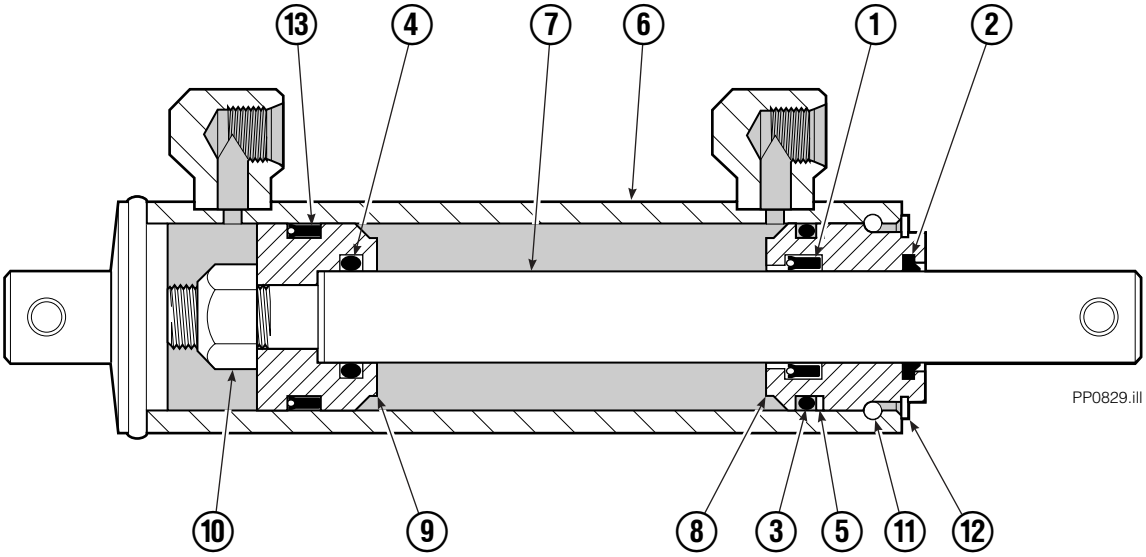

REF	QTY	PART NO.	DESCRIPTION
		6020443	Gripper Cylinder – RH
1	1	646540	▼ Seal
2	1	636850	▼ Wiper
3	1	2718	▼ O-Ring
4	1	2710	▼ O-Ring
5	1	615122	▼ Back-Up Ring
6	1	6020452	Shell
7	1	6020461	Rod
8	1	685664	Retainer
9	1	685665	Piston
10	1	563462	Nut
11	1	563916	Ring
12	1	3137	Ring
13	1	663728	▼ Piston Seal

▼ Included in Service Kit 684827.

PARTS ORDERING LOG

DATE	PURCHASE ORDER	SERIAL NUMBER	PAGE	REF NO.	QTY	CASCADE PART NO.	CUSTOMER PART NO.	DESCRIPTION	PRICE

Do you have questions you need answered right now? Call your nearest Cascade Parts Department.
Visit us online at www.cascorp.com

Cascade Corporation
2501 Sheridan Avenue
Springfield, OH 45505
Tel: 888-CASCADE (227-2233)
FAX: 888-329-0234

Cascade Canada Inc.
5570 Timberlea Blvd.
Mississauga, Ontario
Canada L4W-4M6
Tel: 905-629-7777
FAX: 905-629-7785

Cascade GmbH
D-41199 Monchengladbach
Klosterhofweg 52
Germany
Tel: 49-216-668230
FAX: 49-216-6682323

Cascade Finland
Albert Petreliuksenkatu 3
01370 Vantaa
Finland
Tel: 358-9-836-1925
FAX: 358-9-836-1935

Cascade N.V.
European Headquarters
P.O. Box 3009
1300 El Almere
Damsluisweg 56
1332 ED Almere
The Netherlands
Tel: 31-36-5492911
FAX: 31-36-5492964

Cascade N.V.
Benelux Sales and Service
P.O. Box 3009
1300 El Almere
Damsluisweg 56
1332 ED Almere
The Netherlands
Tel: 31-36-5492950
FAX: 31-36-5492974

Cascade (UK) Ltd.
15, Orgreave Crescent
Dore House Industrial Estate
Handsworth
Sheffield S13 9NQ
England
Tel: 742-697524
FAX: 742-695121

Cascade Scandinavia AB
Box 124
Hammarvägen 10
567 23 Vaggeryd
Sweden
Tel: 42-0-393-36950
FAX: 46-0-393-36959

Cascade Norway
Østerliveien 37A
1153 Oslo
Norway
Tel: 47-22-743160
FAX: 47-22-743157

Cascade France S.A.R.L.
1D Rue De Charaintru
BP 18, 91360 Epinay-Sur-Orge
Morangis Cedex, France
Tel: 33-1- 64547500
FAX: 33-1-64547501

Cascade Hispania S.A.
Carrer 5 Sector C
Zona Franca Duanera
Poligono de la Zon Franca
08040 Barcelona, Spain
Office No. 256
Tel: 93-264-07-30
FAX: 93-264-07-31

Cascade Japan Ltd.
5-5-41,
Torikai Kami
Settsu, Osaka
Japan, 566
Tel: 81-726-53-3490
FAX: 81-726-53-3497

Cascade Korea
108B, Namdong Ind Complex
658-3 Gojan-Dong
Namdong-Gu
Inchon, 405-310 Korea
Tel: 82-32-821-2051
FAX: 82-32-821-2055

Cascade Australia
1445 Ipswich Road
Rocklea, QLD 4106
Australia
Tel: 1-800227-223
FAX: (07) 3373-7333

Cascade New Zealand
15 Ra Ora Drive
East Tamaki, Auckland
New Zealand
Tel: 9-273-9136
FAX: 9-273-9137

Cascade (Africa) Pty. Ltd.
P.O. Box 625, Isando 1600
60A Steel Road
Sparton, Kempton Park
South Africa
Tel: 27-11-975-9240
FAX: 27-11-394-1147

Cascade-Xiamen
No. 668 Yangguang Rd.
Xinyang Industrial Zone
Haicang, Xiamen City
Fujian Province
P.R. China 361026
Tel: 86-592-651-2500
FAX: 86-592-651-2571

Cascade (Singapore)
Trading Co.
Four Seasons Park
Autumn Block - Apt. 1802
12 Cuscaden Walk
Singapore
Tel: 65-834-1935
FAX: 65-834-1936

cascade™

© Cascade Corporation 2003

1-2003