Parts Manual

Model Single-Double Pallet Handler

Serial Number 55E-FD-432

cascade®

For Technical Assistance and to Order Parts . . .
Call: 1-800-CASCADE or 503-669-6300
OR
Write: Cascade Corporation, P.O. Box 20187, Portland, OR 97294-0187

Decals

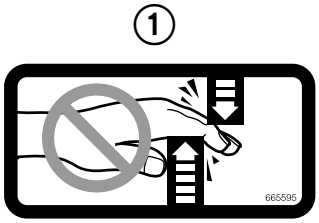

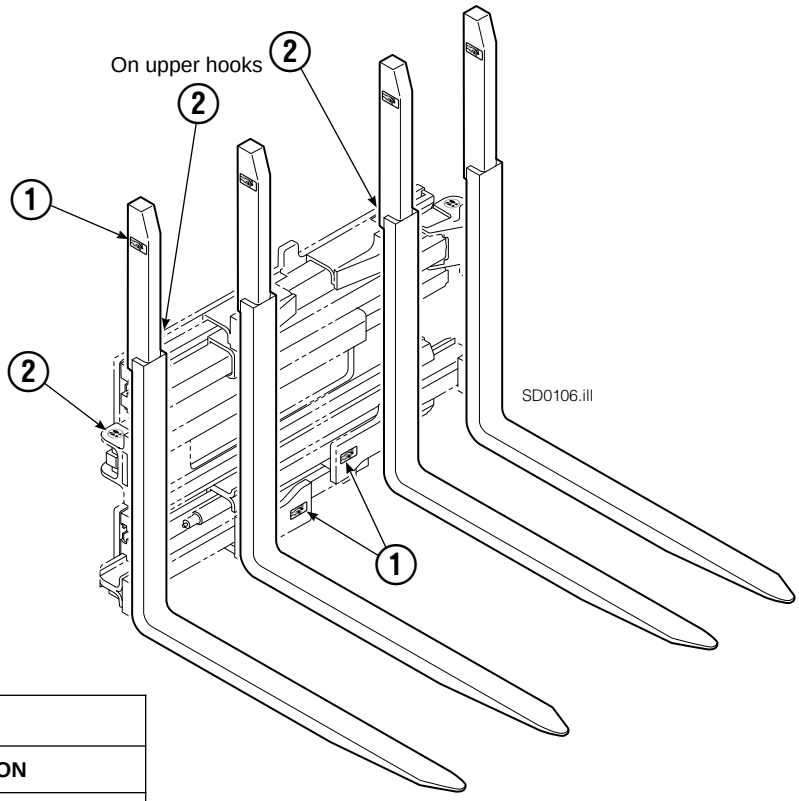

55E			
REF	**QTY**	**PART NO.**	**DESCRIPTION**
1	6	665595	No Hand Hold Decal
2	4	679150	No Step Decal

Publications

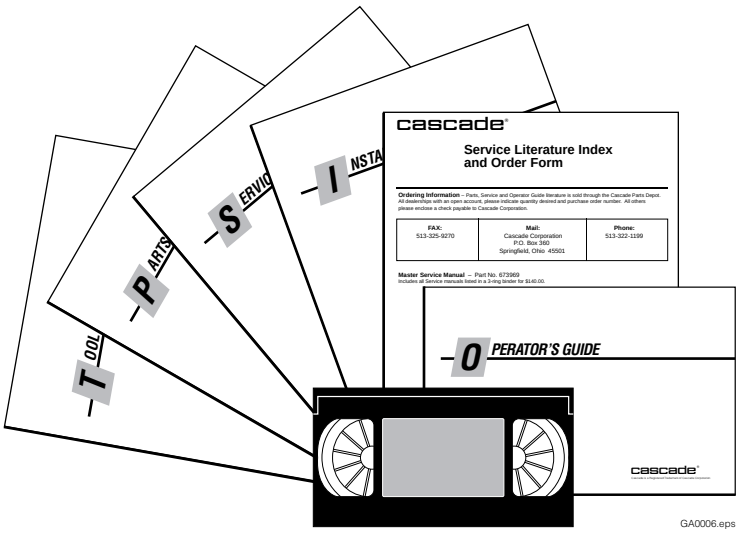

55E	
PART NO.	**DESCRIPTION**
	Parts Manual
213580	Operator's Guide
213372	Installation Instructions
679929	Tool Catalog
673964	Literature Index Order Form

Base Unit Group – ITA Class II

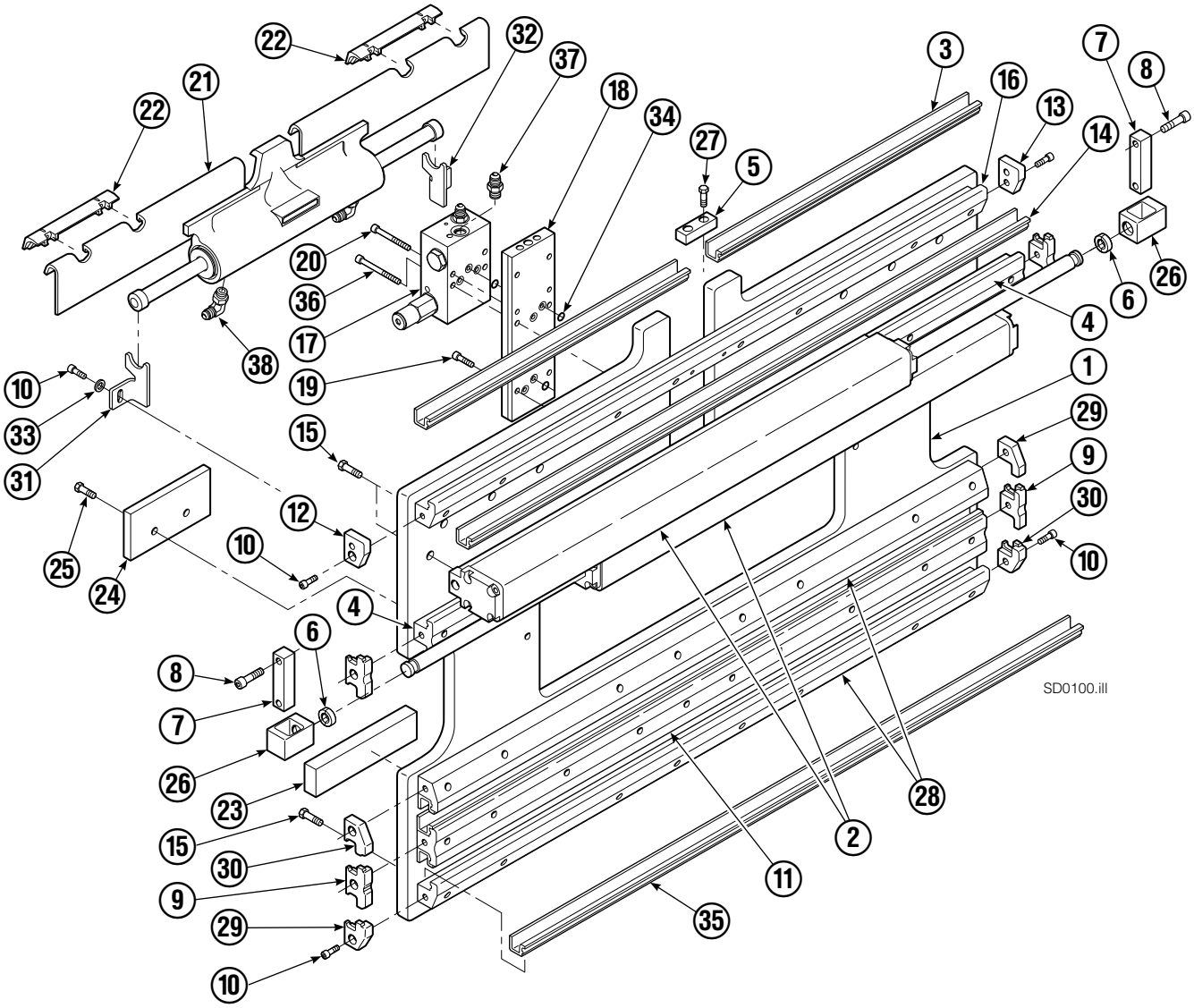

Base Unit Group – ITA Class II

55E							
REF	**QTY**	**PART NO.**	**DESCRIPTION**	**REF**	**QTY**	**PART NO.**	**DESCRIPTION**
		394840	Base Unit Group – Class II	20	2	768800	Capscrew, M8 x 60
1	1	395184	Baseplate Class – II	21	1	205842	Sideshift Cylinder ●
2	2	395186	Frame Cylinder ★	22	2	204187	Upper Bearing
3	1	4730-1038	Bearing Segment	23	2	208350	Lower Bearing
4	2	395187	T-Bar – Upper	24	2	212709	Spacer Block
5	—	—	Fork Stop	25	4	767615	Capscrew, M10 x 25
6	4	210490	Retainer Half Ring ■	26	2	209741	Rod End ■
7	2	210489	Rod End Anchor ■	27	—	—	Capscrew, M10 x 25
8	4	768303	Capscrew, M10 x 35 ■	28	2	214633	T-Bar – Lower
9	4	210140	Bearing Retainer	29	2	212585	Bearing Retainer
10	12	787375	Capscrew, M8 x 20 GR 8.8	30	2	212586	Bearing Retainer
11	1	214631	T-Bar – Lower	31	1	213737	Bracket – RH
12	1	211380	Retainer/Stop – RH	32	1	213736	Bracket – LH
13	1	211379	Retainer/Stop – LH	33	2	787398	Washer, M8
14	4	4730-1050	Bearing Segment	34	7	214053	O-Ring
15	52	211689	Capscrew, M12 x 30 GR 10.9	35	4	4730-1040	Bearing Segment
16	1	214635	T-Bar – Upper	36	2	768802	Capscrew, M8 x 70
17	1	212567	Valve Assembly ▲	37	2	604511	Fitting, 6-6
18	1	211455	Manifold	38	2	601676	Fitting, 6-6
19	6	768208	Capscrew, M8 x 25				

★ See Frame Cylinder page for parts breakdown.
▲ See Valve Assembly – Class II page for parts breakdown.
■ Included in Cylinder Rod Anchor Kit 213856.
● See Sideshift Cylinder page for parts breakdown.
Reference: SK-6116.

Cylinder

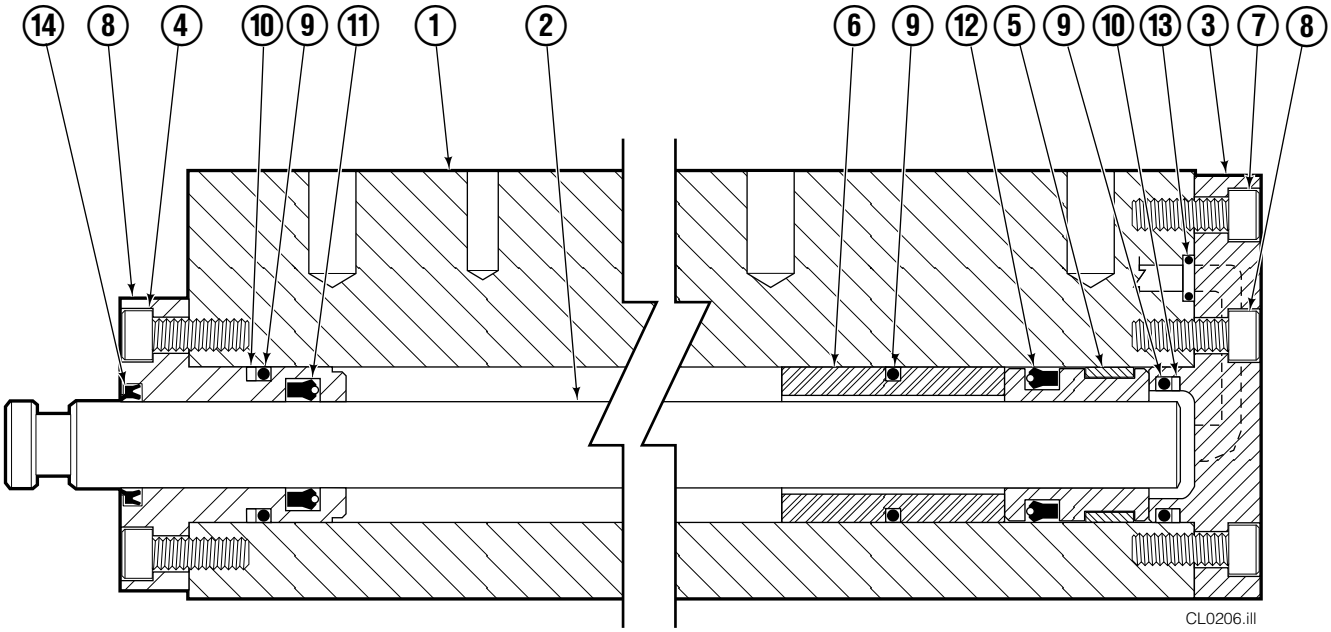

55E							
REF	**QTY**	**PART NO.**	**DESCRIPTION**	**REF**	**QTY**	**PART NO.**	**DESCRIPTION**
		395186	Cylinder Assembly	8	1	212452	Retainer
1	1	395188	Frame	9	3	210053	O-Ring ▲
2	1	4157-779	Rod	10	2	210050	Back -Up Ring ▲
3	1	213783	Cap	11	1	212477	Seal ▲
4	8	768208	Capscrew, M8 x 2	12	1	209808	Seal ▲
5	1	209809	Bearing ▲	13	2	214053	O-Ring ▲
6	1	4274-435	Spacer	14	1	562131	Wiper ▲
7	1	787375	Capscrew, M8 x 2		1	210090	Seal Kit

▲ Included In Service Kit 210090.

Reference: S-4152, S-4151.

Valve
ITA Class II

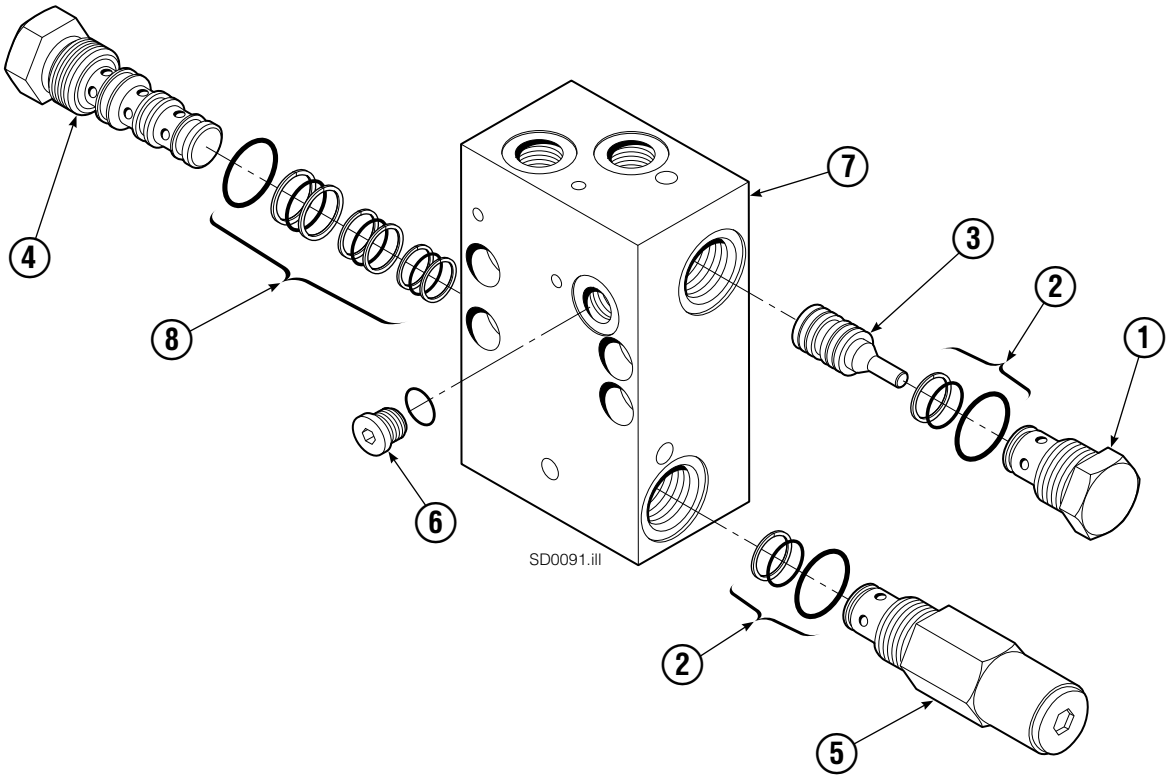

55E			
REF	QTY	PART NO.	DESCRIPTION
		212567	Valve Assembly
1	1	209847	Check Valve
2	2	682170	Service Kit ▲
3	1	210265	Piston
4	1	210266	Flow Divider/Combiner
5	1	213535	Crossover Relief Valve
6	1	609234	Fitting, 4
7	1	211453	Valve Body
8	1	679992	Service Kit ▲
		213604	Valve Service Kit

▲ Included in Valve Service Kit 213604.

Sideshift Cylinder
ITA Class II

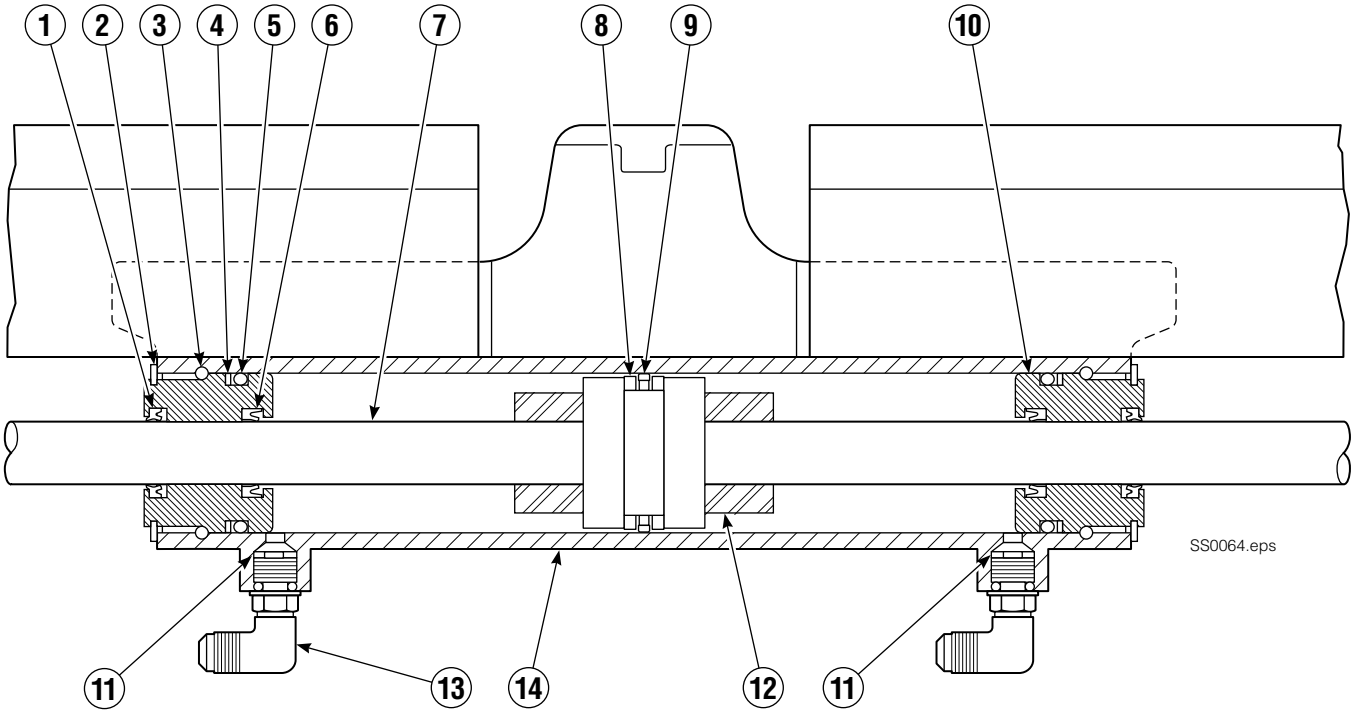

55E			
REF	**QTY**	**PART NO.**	**DESCRIPTION**
		205842	Cylinder Assembly
● 1	2	562131	Wiper Seal
2	2	562951	Snap Ring
3	2	562942	Retaining Ring
● 4	2	563388	Back-Up Ring
● 5	2	562127	O-Ring
● 6	2	562132	Rod Seal
7	1	562055	Rod
● 8	2	563278	Bearing Ring
● 9	1	564141	Piston Seal
10	2	562792	Retainer
11	2	205369	Speed Control Washer
12	2	–	Spacer
13	2	601676	Fitting, JIC 6-6
13	2	666984	Fitting, JIC 6-4
14	–	■	Cylinder Shell
		563487	Service Kit

● Included in Service Kit 563487.
■ Not serviceable, order new cylinder assembly.

Arm Group

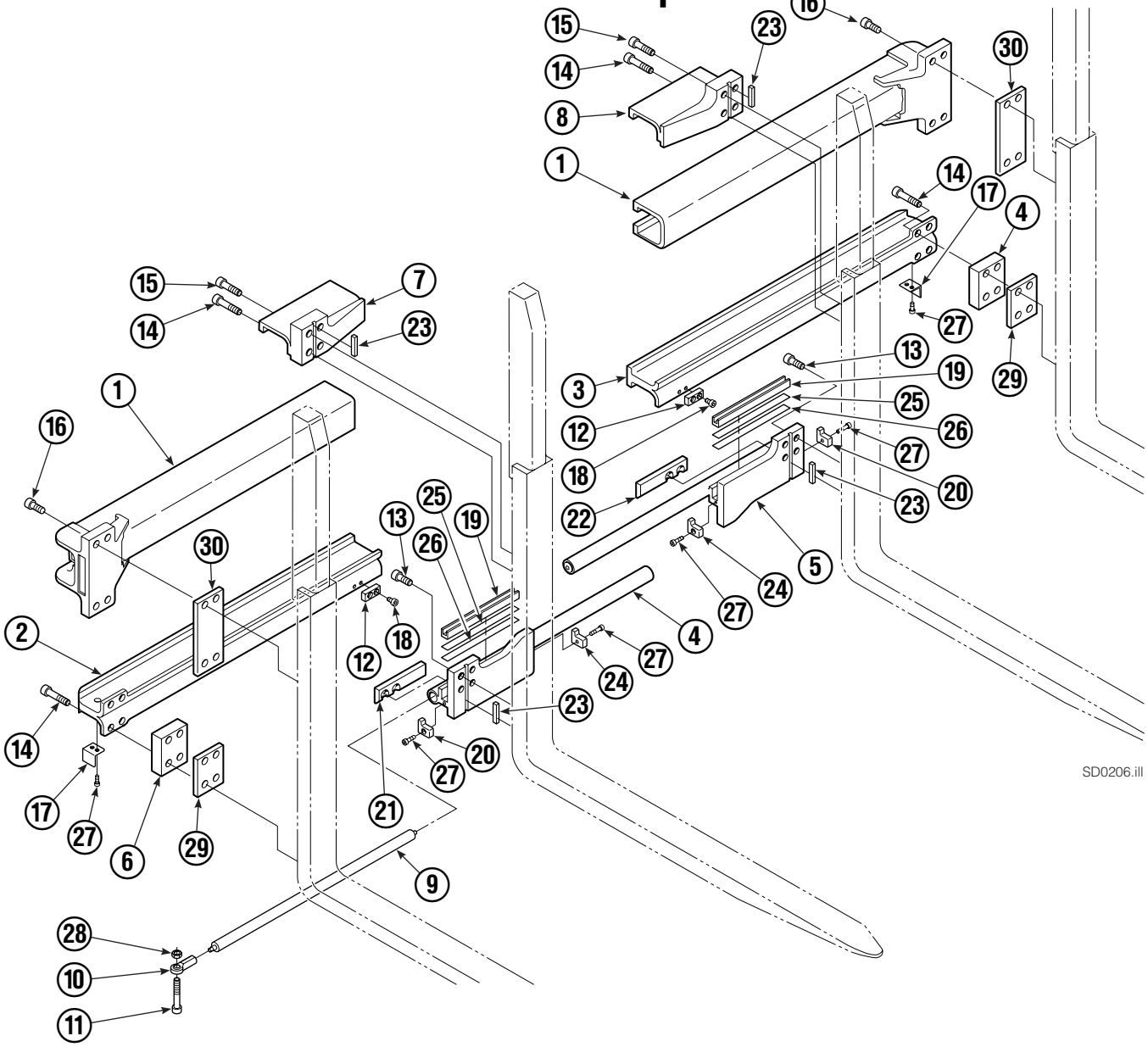

55E							
REF	QTY	PART NO.	DESCRIPTION	REF	QTY	PART NO.	DESCRIPTION
		3000174	Arm Group	16	8	769573	Capscrew, M16 x 30
1	2	4316-0733	Upper Arm Bar	17	2	213022	Guard
2	1	397824	Lower Arm Bar – RH	18	4	214414	Capscrew, M10 x 12
3	1	397823	Lower Arm Bar – LH	19	2	4501-0222	Bearing Segment
4	2	210587	Spacer	20	2	212979	Bearing Retainer
5	1	218342	Lower Hook – RH	21	1	212682	Bearing – RH
6	1	399736	Lower Hook – LH	22	1	213899	Bearing – LH
7	1	395189	Upper Hook – RH	23	4	213364	Key
8	1	395190	Upper Hook – LH	24	2	213360	Bearing Retainer
9	2	212683	Gas Spring	25	4	212559	Shim, .04 in. (.1 mm)
10	2	213011	Rod End	26	4	213913	Shim, .020 in. (.5 mm)
11	2	215855	Capscrew, M8x60	27	8	787375	Capscrew, M8 x 20
12	2	212687	Lower Fork Stop	28	2	786881	Nut, M8
13	8	769574	Capscrew, M16 x 35	29	4	797610	Spacer
14	12	769578	Capscrew, M16 x 60	30	4	797611	Spacer
15	4	769577	Capscrew, M16 x 50				

Reference: SK-6116 and 6131. Common Parts 214415.

Interlocking Backrest/Fork Group

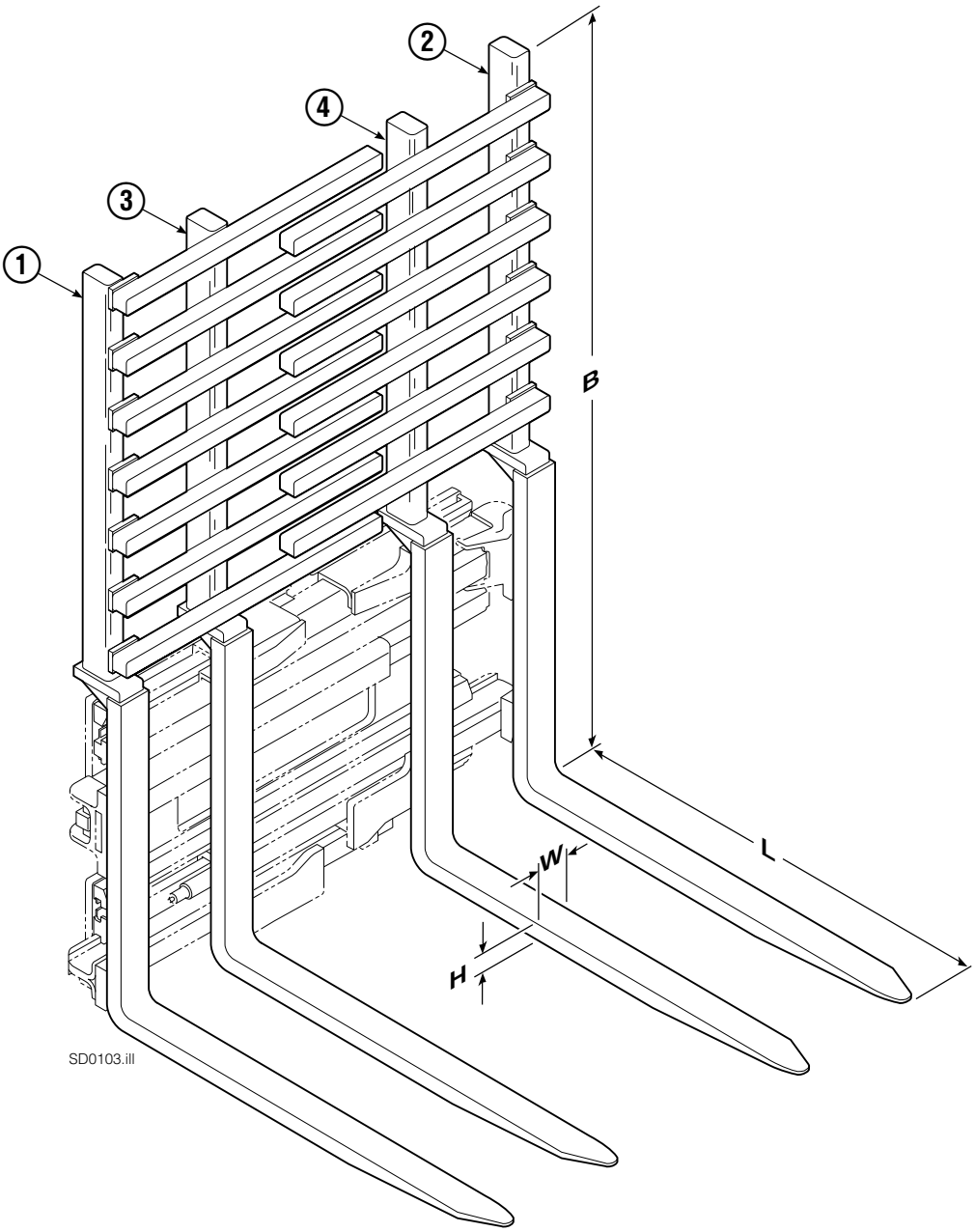

55E								
SIZE (IN.)				FORK GROUP PART NO.	REF 1	REF 2	REF 3	REF 4
L	W	H	B		Outer Fork–RH	Outer Fork–LH	Inner Fork–RH	Inner Fork–LH
42.1	3.2	1.8	48	397811	397887	397885	397891	397889

Mounting Group
ITA Class II

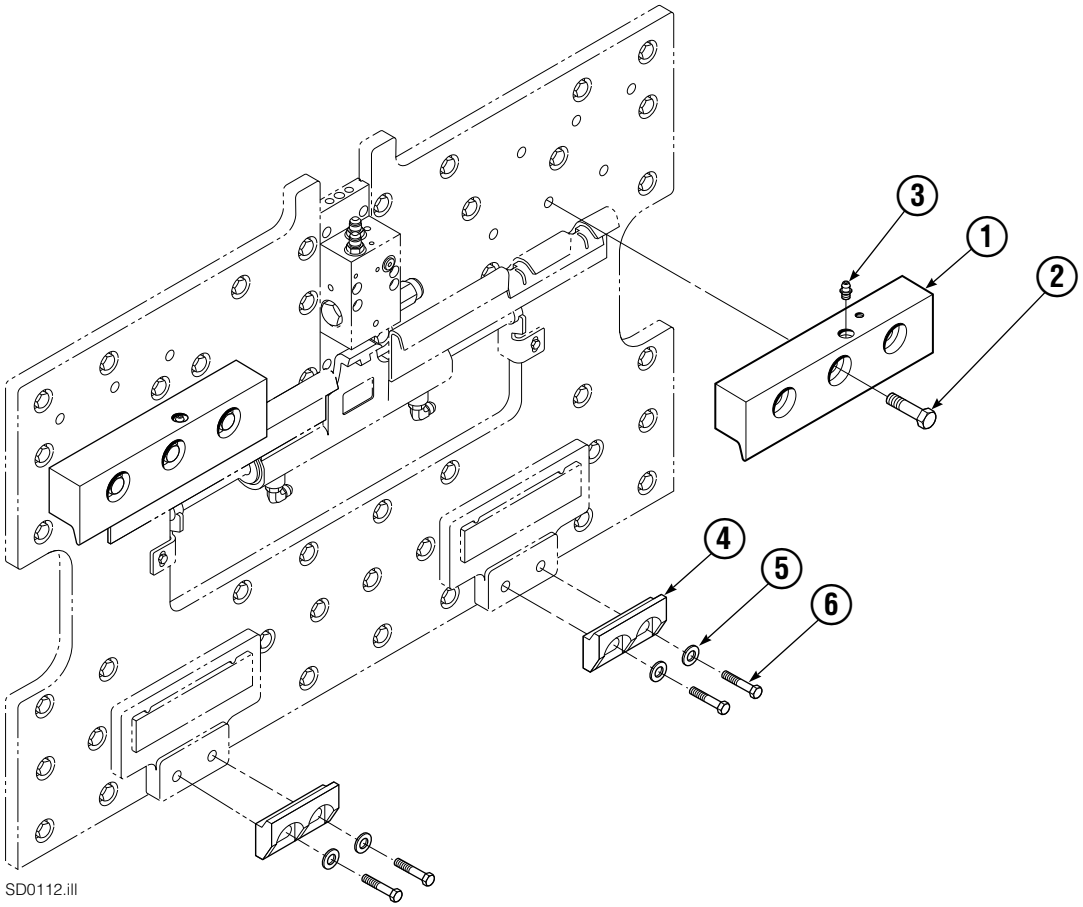

55E			
REF	QTY	ITA II PART NO.	DESCRIPTION
		212569	Upper Hook Group ▲
		391334	Lower Hook Group ★
1	2	210591	Upper Hook
2	6	751511	Capscrew, M16x55
3	2	7403	Grease Fitting
4	2	675968	Lower Hook
5	4	667225	Washer
6	4	779009	Capscrew

▲ Includes items 1, & 2.

★ Includes items 4, 5, & 6.

Reference: SK-6116.

Do you have questions you need answered right now? Call your nearest Cascade Parts Department.

Cascade Corporation
2201 NE 201st
Troutdale, OR 97060
Tel: 1-800-CAS-CADE
503-669-6300
FAX: 503-669-6338

Cascade Canada Inc.
5570 Timberlea Blvd.
Mississauga, Ontario
Canada L4W-4M6
Tel: 905-629-7777
FAX: 905-629-7785

Cascade GmbH
D-41199 Monchengladbach
Klosterhofweg 52
Germany
Tel: 21-66-602091
FAX: 21-66-680947

Cascade N.V.
Kirkkokatu 1
48100 Kotka
Finland
Tel: 52-184393
FAX: 52-184833

Cascade N.V.
European Headquarters
P.O. Box 3009
1300 El Almere
Damsluisweg 56
1332 ED Almere
The Netherlands
Tel: 31-36-5492911
FAX: 31-36-5492964

Cascade N.V.
Benelux Sales and Service
P.O. Box 3009
1300 El Almere
Damsluisweg 56
1332 ED Almere
The Netherlands
Tel: 31-36-5492950
FAX: 31-36-5492974

Cascade (UK) Ltd.
15, Orgreave Crescent
Dore House Industrial Estate
Handsworth
Sheffield S13 9NQ
England
Tel: 742-697524
FAX: 742-695121

Cascade Scandinavia
Hydraulik A.B.
Muskötgatan 19, E8-9
S25466 Helsingborg
Sweden
Tel: 42-151135
FAX: 42-152997

Cascade France S.A.R.L.
11, Rue Jean Charcot
Zone Industrielle Sud or
B.P. 22
91421 Morangis Cedex
France
Tel: 1- 64547500
FAX: 1-64547501

Cascade Hispania S.A.
Avenida De La Fabregada, 7
Hospitalet De Llobregat
Barcelona
Spain
Tel: 3-335-5158
FAX: 3-335-4756

Cascade Japan Ltd.
5-5-41,
Torikai Kami
Settsu, Osaka
Japan, 566
Tel: 81-726-53-3490
FAX: 81-726-53-3497

Cascade Korea
Room 508, Pum Yang Bldg.
750-14, Bang Bac-Dong
Se-Cho Ku, Seoul
Korea
Tel: 2599-7131 ext. 512
FAX: 2533-8089

HYCO-Cascade Pty. Ltd.
87 Antimony Street
Carole Park,
Brisbane 4300
Australia
Tel: 7-271-1966
FAX: 7-271-3830

HYCO-Cascade (NZ) Ltd.
23 Haseler Cresent
P.O. Box 38-440
Howick, Auckland
New Zealand
Tel: 9-273-9136
FAX: 9-273-9137

Cascade (Africa) Pty. Ltd.
P.O. Box 625, Isando 1600
60A Steel Road
Sparton, Kempton Park
South Africa
Tel: 975-9240
FAX: 394-1147

Cascade-Xiamen
Wanshan No. 1 Workshop
Huli Road
Xiamen 361006
Fujian, PRC
Tel: 592-562-4600
FAX: 592-562-4671

Sunstream Industries
PTE Ltd.
No. 3 Tuas Link 1
Singapore 2263
Tel: 863-3488
FAX: 863-1368

cascade™

© Cascade Corporation 1997