Parts Manual

Model Paper Roll Clamp

Serial Number 90F-RCF-02CR1

cascade® corporation

For Technical Assistance call: 800-227-2233, Fax: 888-329-8207
To Order Parts call: 888-227-2233, Fax: 888-329-0234
OR
Write: Cascade Corporation, P.O. Box 20187, Portland, OR 97220
Internet: www.cascorp.com

Safety Decals

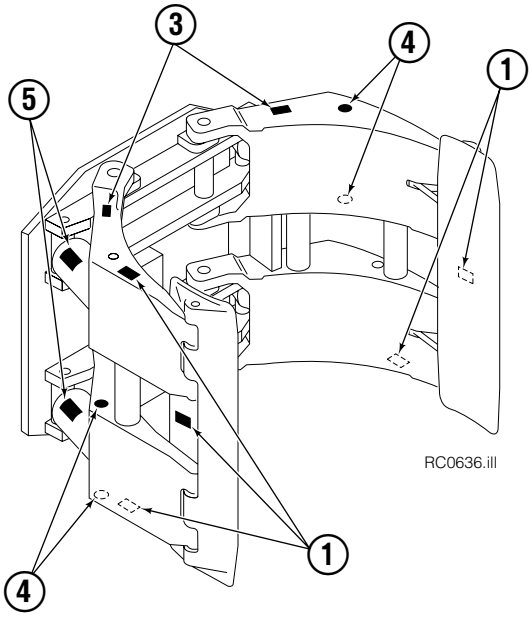

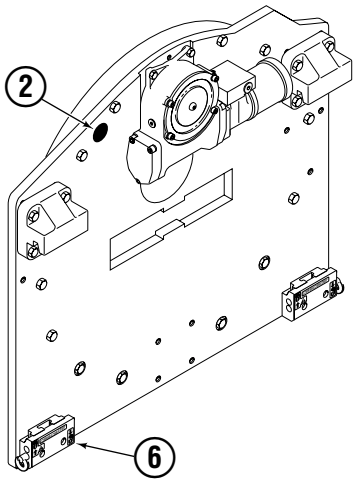

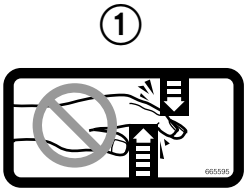

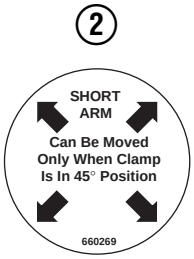

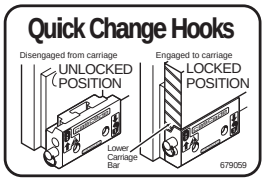

Roll Clamp Safety Decals			
REF	**QTY**	**PART NO.**	**DESCRIPTION**
1	6	665595	No Hand Hold Decal
2	3	660269	Short Arm Rotation Position Decal
3	4	656038	Caution Decal
4	4	679150	No Step Decal
5	4	665677	Trapped Pressure Decal
6	1	679059	Quick-Change Hook Decal

Publications

Roll Clamp Publications	
674512	Service Manual
674509	Operator's Guide – Fixed Frame
676268	Operator's Guide – Swing Frame
674510	Installation Instructions – Fixed Frame
674511	Installation Instructions – Swing Frame
677555	Driver Training Video – VHS
678363	Troubleshooting Video – VHS
680664	Servicing Cascade Cylinders – VHS
679929	Tool Catalog
673964	Literature Index Order Form

Frame Group

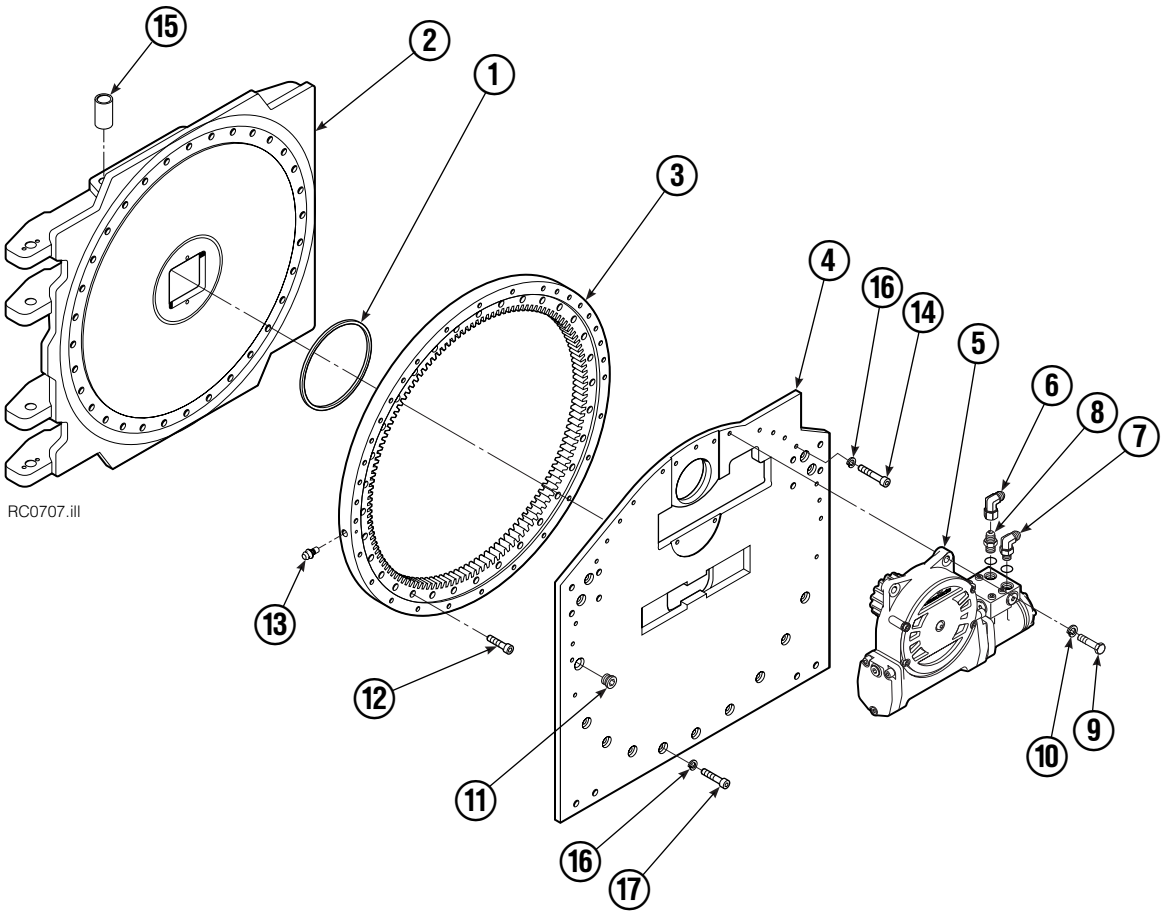

90F			
REF	QTY	PART NO.	DESCRIPTION
		223034	Frame Group
1	1	670931	Seal
2	1	223050	Faceplate
3	1	214481	Bearing Assembly
4	1	214484	Baseplate
5	1	795492	Drive Group ▲
6	1	605761	Fitting, 8-8
7	1	601250	Fitting, 8-8
8	1	601377	Fitting, 8-8
9	4	763021	Capscrew, M12 x 30
10	4	6290	Lockwasher, 1/2
11	1	664071	Plug
12	32	753221	Capscrew, M12 x 50
13	1	7401	Grease Fitting
14	19	213633	Capscrew, M12 x 55
15	8	675007	Bushing
16	32	681473	Washer, M12
17	13	206174	Capscrew, M12 x 45

▲ See Drive Group page for parts breakdown.

Reference: Common Parts Group 223023, SK-6189.

Drive Group

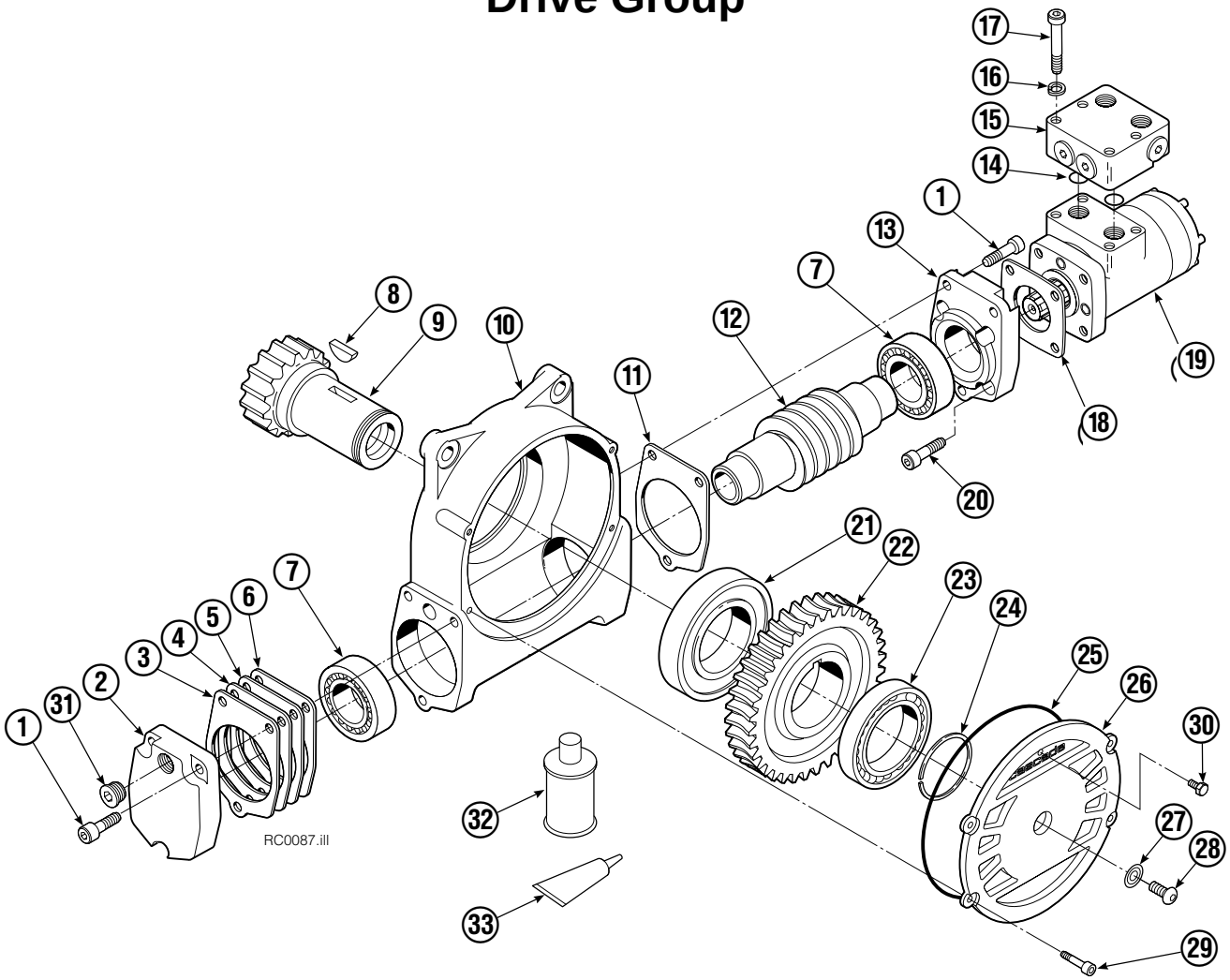

REF	QTY	PART NO.	DESCRIPTION	REF	QTY	PART NO.	DESCRIPTION
		795492	Drive Group with 2.8 c.i. Motor	19	1	206392	Drive Motor – 2.8 c.i. ■
1	6	769570	Capscrew, M12 x 25	20	4	4468	Capscrew, 3/8 NC x .75 GR8
2	1	676855	Cover	21	1	670580	Bearing
3	●	674513	Shim – .005" (blue)	22	1	675609	Worm Gear
4	●	670574	Shim – .010" (brown)	23	1	670581	Bearing
5	●	671757	Shim – .015" (pink)	24	1	7214	Snap Ring
6	●	671758	Shim – .020" (yellow)	25	1	643423	O-Ring
7	2	670579	Bearing	26	1	775552	Cover
8	1	670582	Key	27	1	783609	Seal
9	1	670556	Pinion	28	1	783608	Capscrew, M10 x 16
10	1	775551	Housing	29	4	200882	Capscrew, M8 x 20
11	1	686465	Gasket	30	1	644010	Relief Fitting
12	1	675608	Worm	31	1	604510	Fitting, 6
13	1	775553	Adapter	32	1	656300	Gear Box Lube – 48 oz.
14	2	2705	O-Ring	33	1	668184	Sealant
15	1	670549	Check Valve ▲			670578	Shim Service Kit (items 3-6,25,33)
16	4	6444	Lockwasher			675637	Bearing Service Kit (items 21 & 33)
17	4	607059	Capscrew, 5/16 NC x 1.75 GR8			675638	Bearing Service Kit (items 3-7,25)
18	1	670575	Gasket			685227	Motor Kit-4.5 (items 4,14,18)

● Quantity as required.

▲ See Check Valve page for parts breakdown.

■ See Drive Motor page for parts breakdown.

Drive Motor

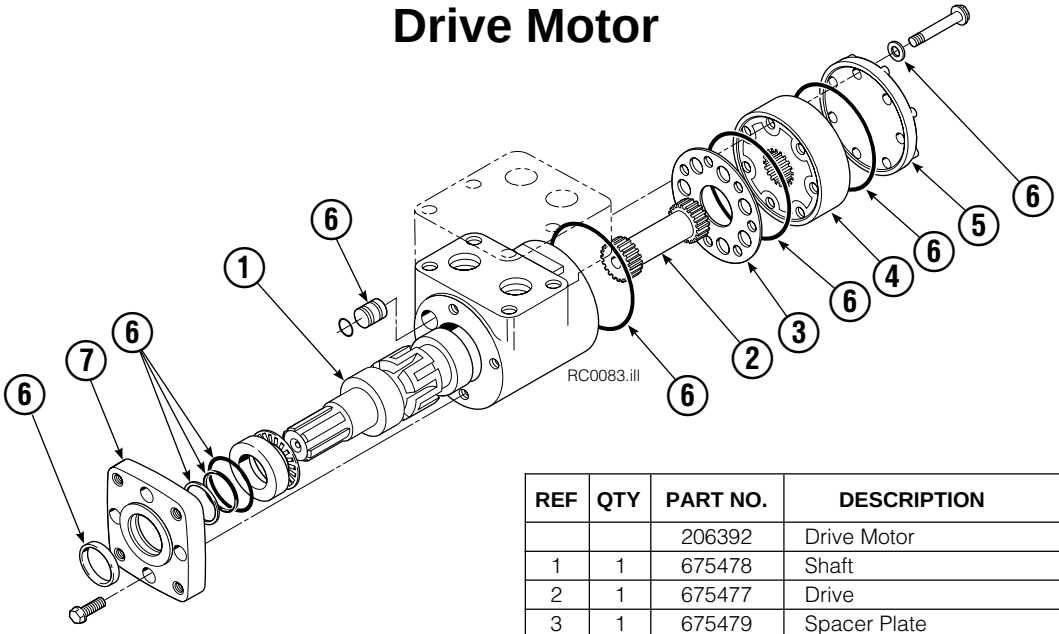

REF	QTY	PART NO.	DESCRIPTION
		206392	Drive Motor
1	1	675478	Shaft
2	1	675477	Drive
3	1	675479	Spacer Plate
4	1	675480	■ Geroter Set (101-1768-007)
4	1	685075	■ Geroter Set (101-1768-009)
5	1	675482	End Cap
6	1	206405	● Service Kit
7	1	685089	■ Flange (101-1768-007)
7	1	685090	■ Flange (101-1768-009)

Cascade provides service replacement parts for the listed parts only. Due to cost, if others parts need replacement, the complete drive motor should be replaced.

■ See Nameplate under valve for correct part number of Gerotor Set and Flange.

● Compatible with water glycol based hydraulic fluids.

Check Valve

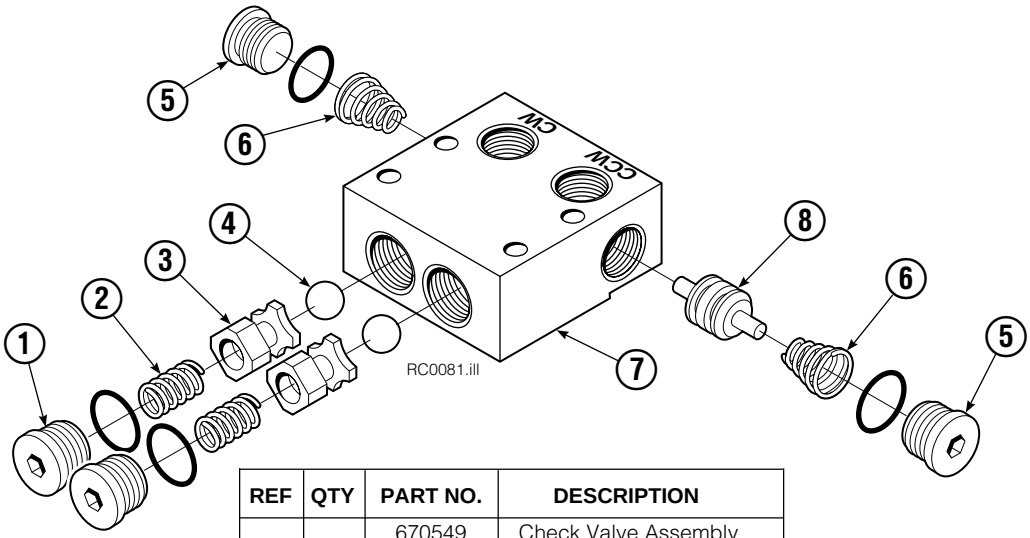

REF	QTY	PART NO.	DESCRIPTION
		670549	Check Valve Assembly
1	2	609453	Fitting, 10
2	2	670552	Spring
3	2	670551	Guide
4	2	7020	Ball
5	2	602580	Fitting, 8
6	2	673989	Spring
7	1	670550	Body
8	1	670553	Spool

Common Components

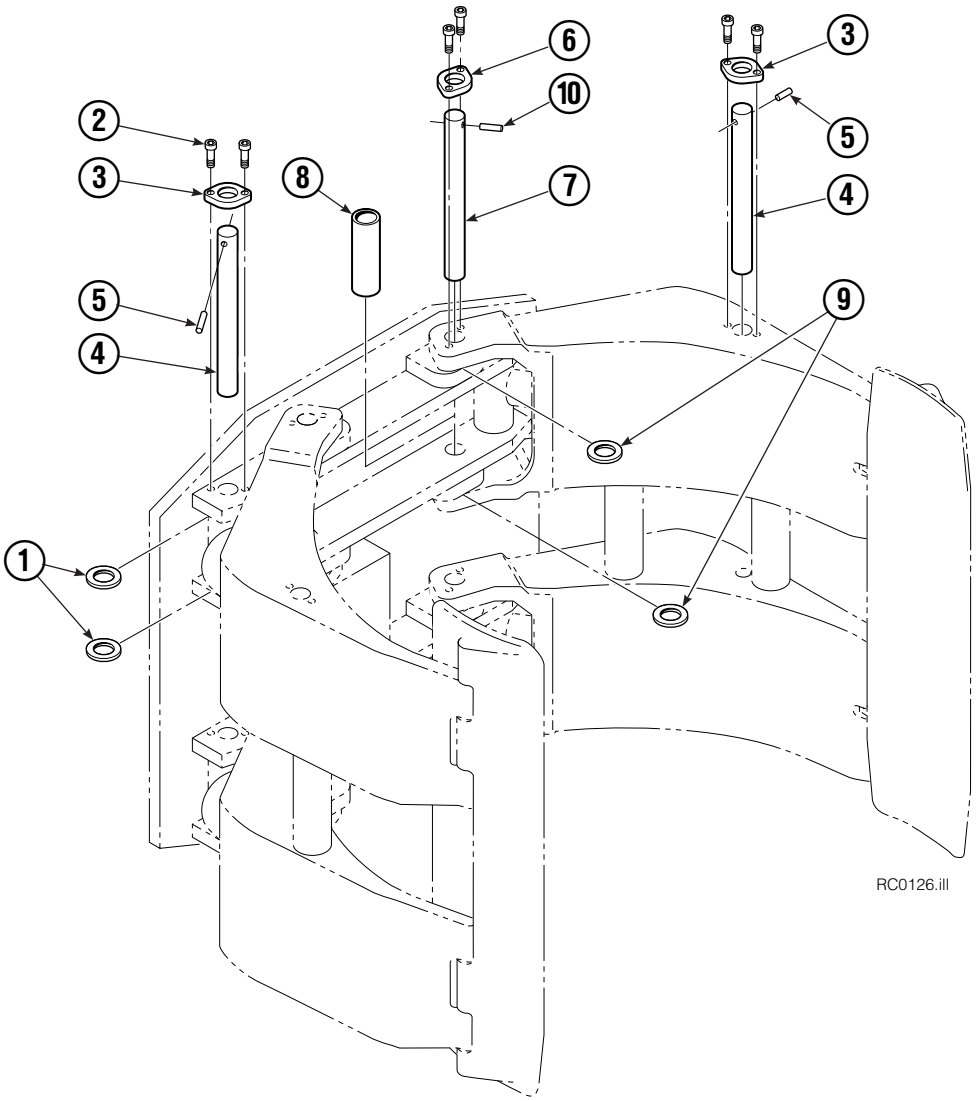

90F			
REF	**QTY**	**PART NO.**	**DESCRIPTION**
		206686	Components Group
1	8	660200	Shim
2	24	768809	Capscrew, M8 x 16-8.8
3	8	206589	Retainer
4	8	680651	Pin
5	8	673385	Drive Pin
6	4	206591	Retainer
7	4	675022	Pin
8	4	681673	Spacer
9	16	673379	Shim
10	4	675086	Drive Pin

Reference: SK-5314, SK-5315.

Hosing Group

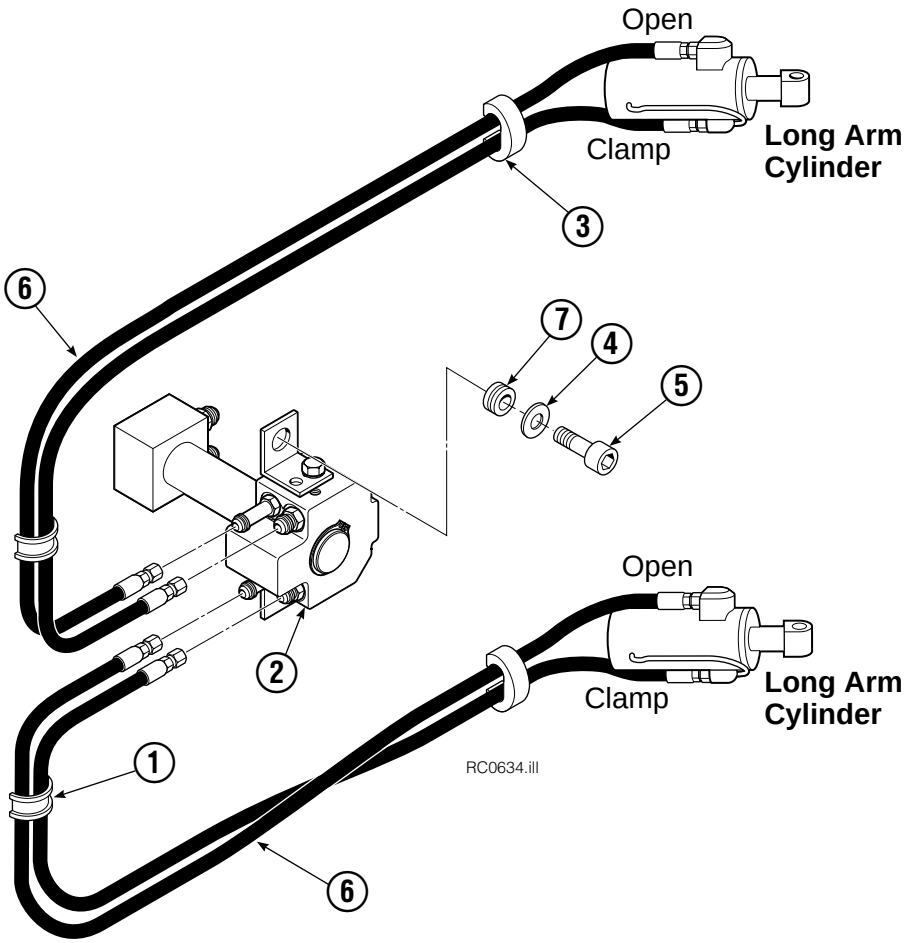

90F			
REF	**QTY**	**PART NO.**	**DESCRIPTION**
		223427	Hosing Group
1	2	680114	Insert
2	1	222683	Revolving Connection ▲
3	2	673417	Segment
4	2	209019	Washer
5	2	212088	Shoulder Bolt
6	4	681286	Hose, 65.00 in.
7	2	208764	Grommet

▲ See Revolving Connection page for parts breakdown.
Reference: Common Parts Group 223428.

Revolving Connection
Fixed Short Arm

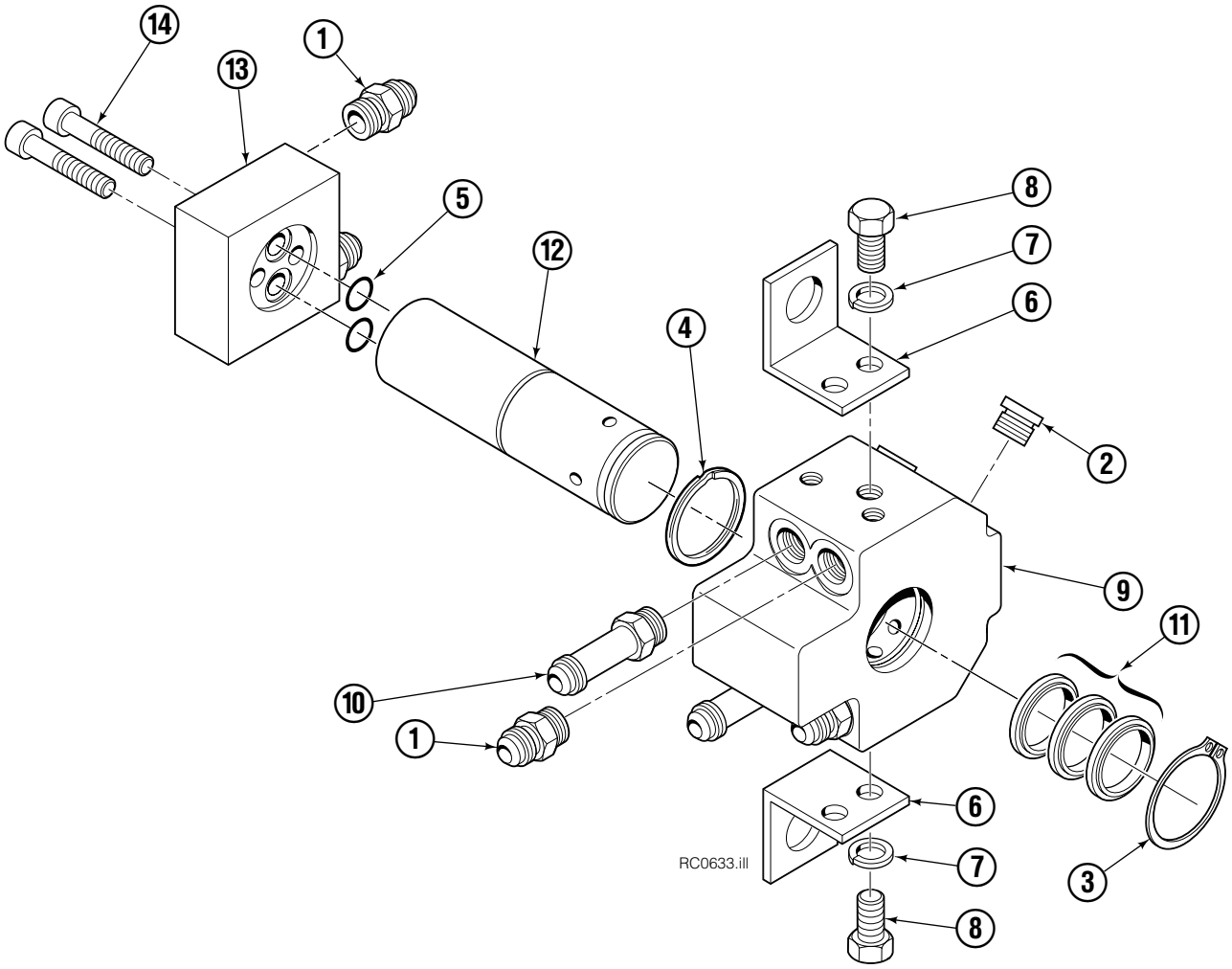

90F			
REF	**QTY**	**PART NO.**	**DESCRIPTION**
		222683	Revolving Connection
1	4	604511	Fitting, 6-6
2	4	604510	Fitting, 6
3	1	3138	Snap Ring
4	1	7341	Snap Ring
5	2	564448	O-Ring
6	2	222675	Bracket
7	2	681238	Lockwasher, M10
8	2	212632	Capscrew, M10 x 20
9	1	222671	Body
10	2	605743	Fitting Adapter, 6-6
11	3	214649	Seal
12	1	222674	Shaft
13	1	222684	End Block
14	2	768798	Capscrew, M8 x 40
		222694	Service Kit

Long Arm Cylinder

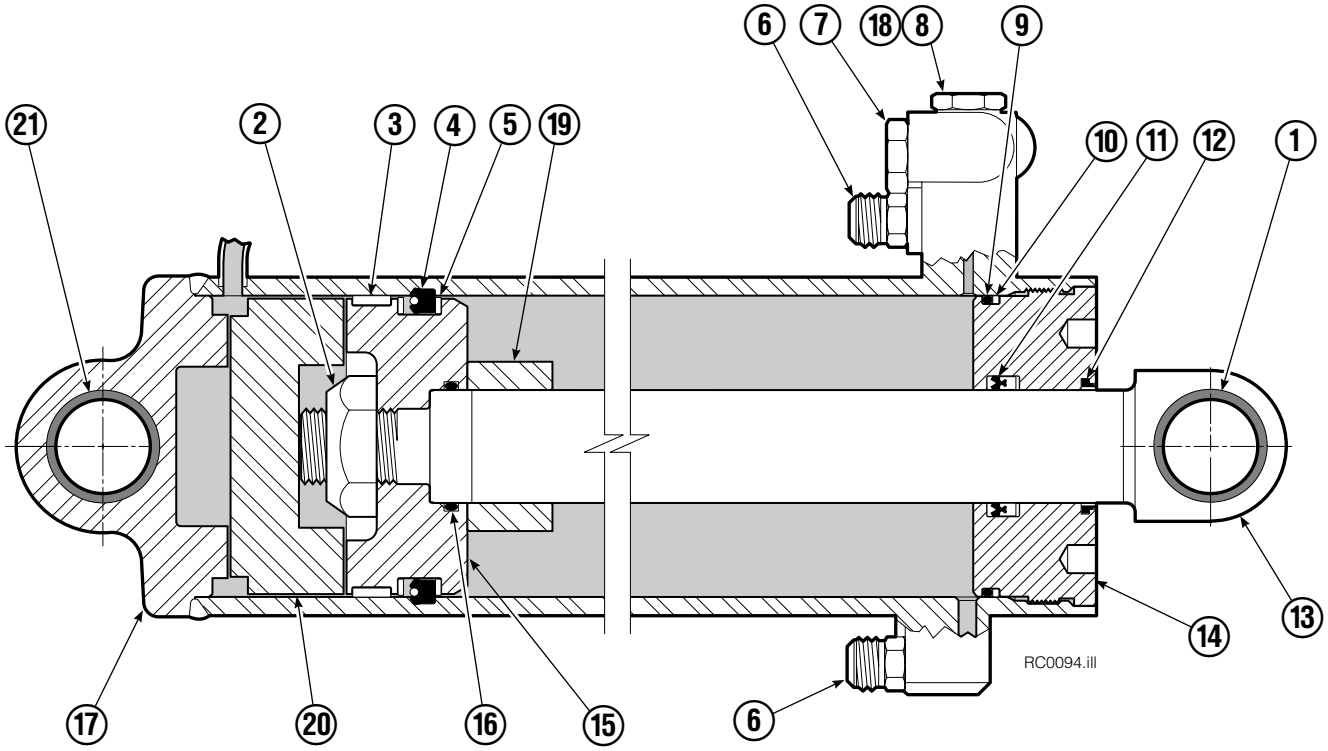

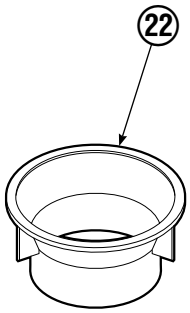

REF	QTY	PART NO.	DESCRIPTION
		580171	Cylinder Assembly
1	1	674843	Bearing
2	1	560997	Nut
3	1	660769	◆ Bearing
4	1	662462	◆ Seal
5	2	638295	◆ Back-Up Ring
6	2	604511	Fitting, 6-6
7	1	556852	Fitting, 4
8	1	557212	Check Valve
9	1	2801	◆ O-Ring
10	1	583977	◆ Back-Up Ring
11	1	554598	◆ Seal
12	1	628047	◆ Wiper
13	1	557405	Rod
14	1	555724	Retainer
15	1	557389	Piston
16	1	2722	◆ O-Ring
17	1	558353	Shell
18	1	667516	Check Valve Service Kit
19	1	—	Spacer
20	1	—	Spacer
21	2	675006	Bearing
22	1	669243	Seal Loader
		555725	Service Kit

◆ Included in Service Kit 555725.
Reference: S-5320, S-5321.

Link

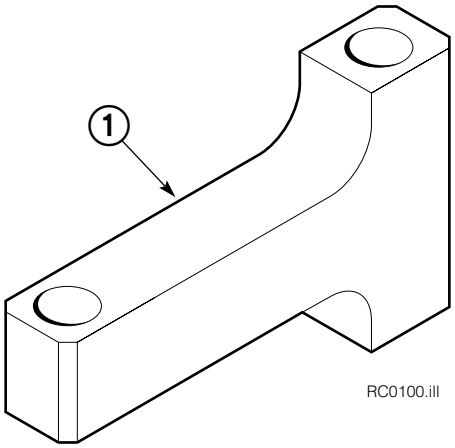

REF	QTY	PART NO.	DESCRIPTION
1	2	675098	Link

Short Arm

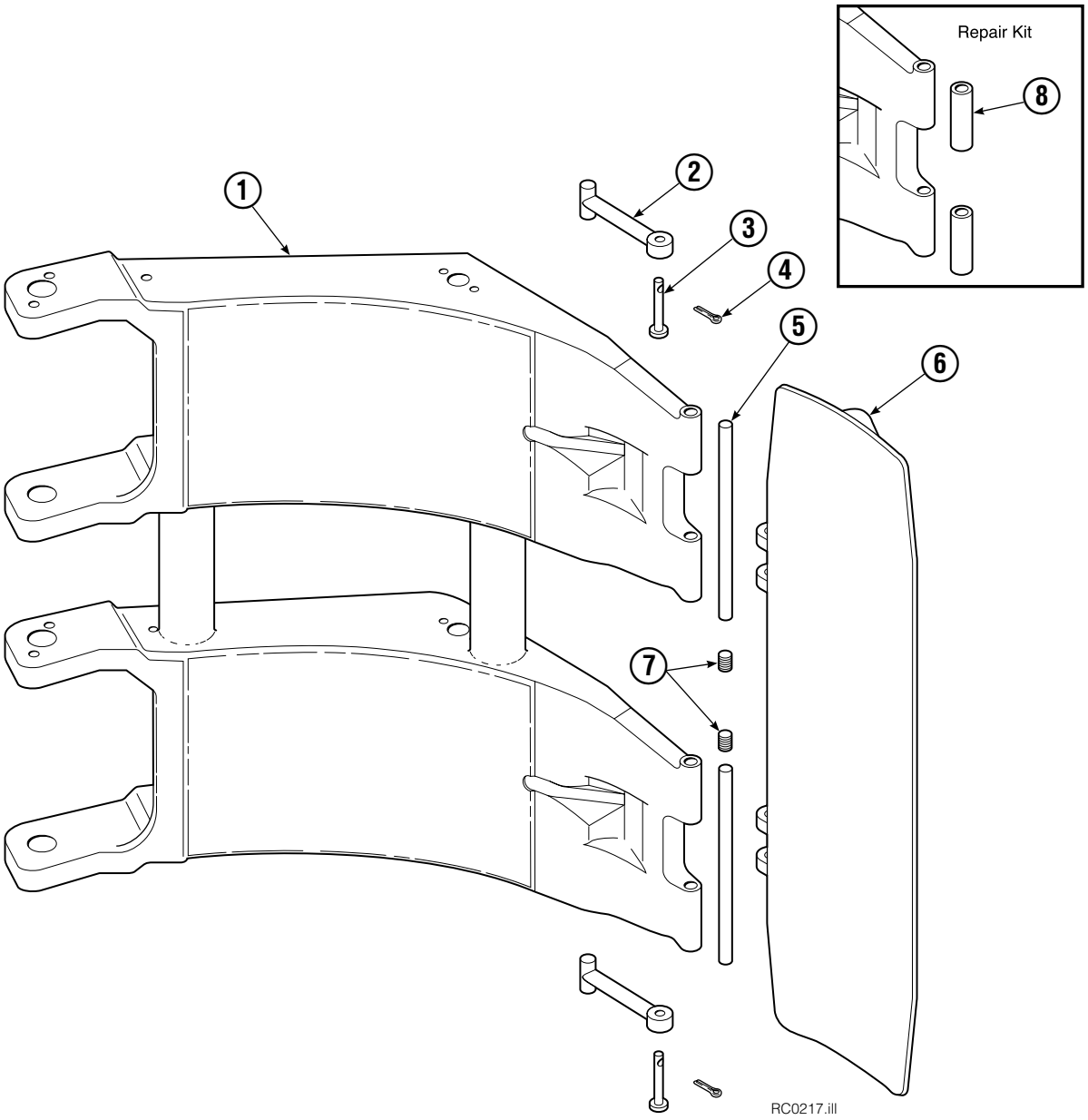

90F			
REF	QTY	PART NO.	DESCRIPTION
		674948	Contact Pad Group ▲
1	1	206672	Short Arm
2	2	674994	Link
3	2	682978	Clevis Pin
4	2	6525	Cotter Pin
5	2	674993	Pin
6	1	674962	Contact Pad
7	2	689900	Plug
8	1	676810	Arm Tip Repair Kit

▲ Includes items 2 through 7 only.

Long Arm

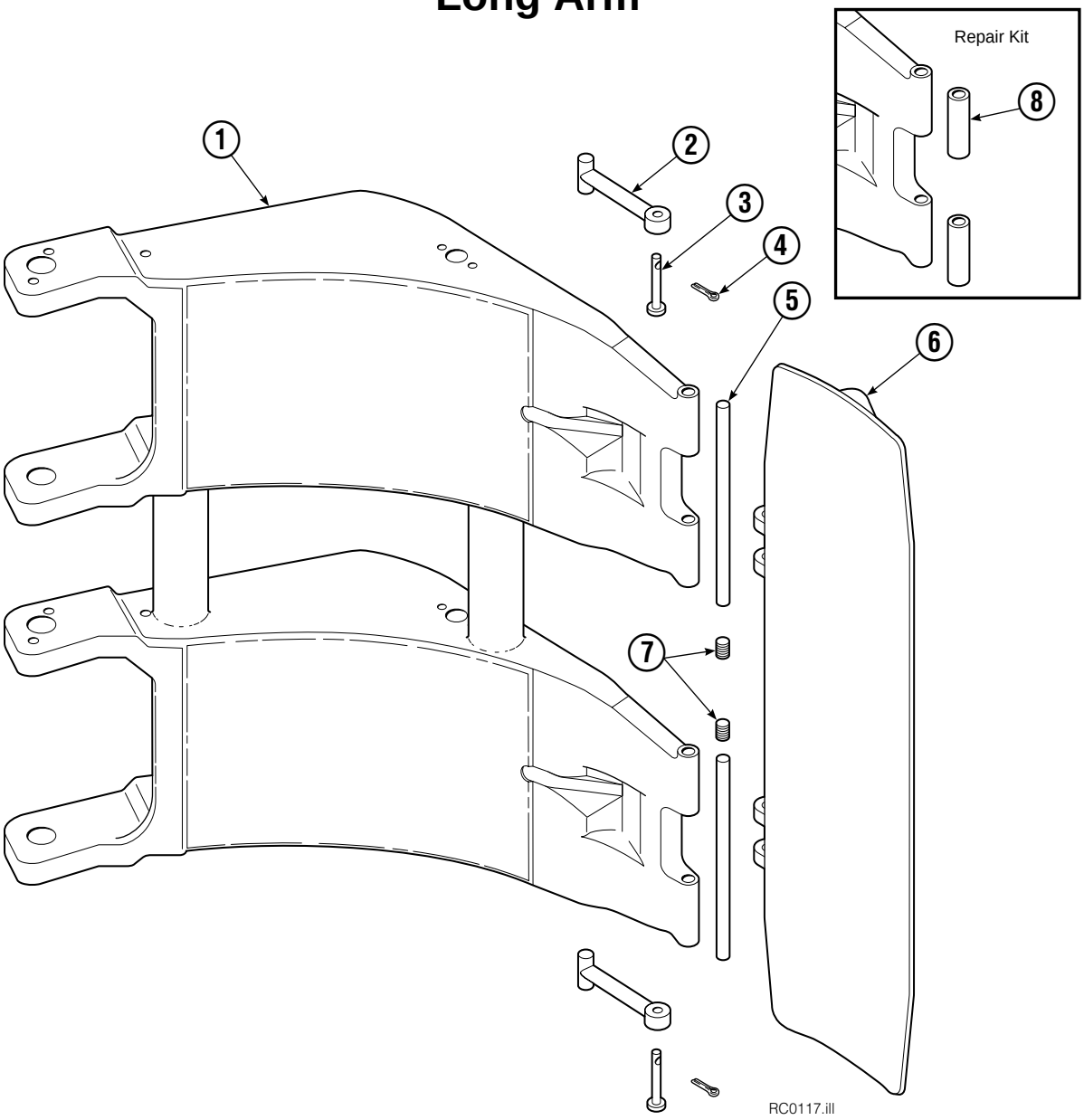

90F			
REF	QTY	PART NO.	DESCRIPTION
		206598	Contact Pad Group ▲
1	1	206673	Long Arm
2	2	674994	Link
3	2	682978	Clevis Pin
4	2	6525	Cotter Pin
5	2	674993	Pin
6	1	206601	Contact Pad
7	2	689900	Plug
8	1	676810	Arm Tip Repair Kit

▲ Includes items 2 through 7 only.

Bolt-On Mounting Group

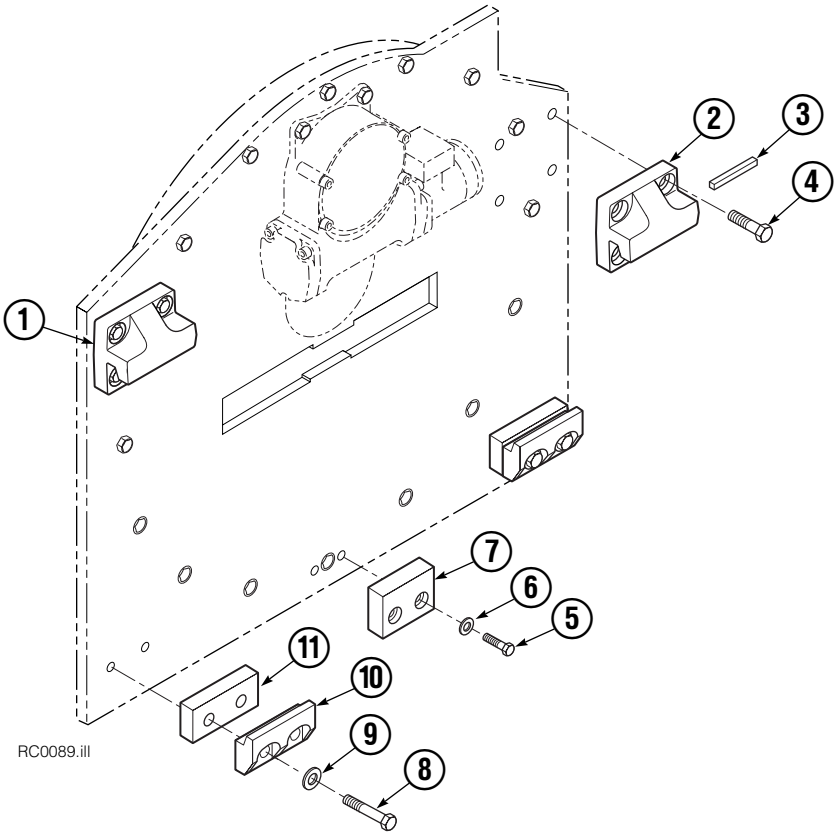

Class IV, 1.8°			
REF	**QTY**	**PART NO.**	**DESCRIPTION**
		684880	Mounting Group
1	1	684877	Upper Hook – LH
2	1	675061	Upper Hook – RH
3	1	670704	Stop Kit
4	8	679082	Capscrew, M20 x 35
5	2	768810	Capscrew, M10 x 30
6	2	680030	Lockwasher, M10
7	1	681057	Center Spacer
8	4	676854	Capscrew, M20 x 60
9	4	670692	Washer
10	2	679832	Lower Hook
11	2	681056	Spacer

Reference: SK-5286.

Do you have questions you need answered right now? Call your nearest Cascade Parts Department.
Visit us online at www.cascorp.com

Cascade Corporation
2501 Sheridan Avenue
Springfield, OH 45505
Tel: 888-CASCADE (227-2233)
FAX: 888-329-0234

Cascade Canada Inc.
5570 Timberlea Blvd.
Mississauga, Ontario
Canada L4W-4M6
Tel: 905-629-7777
FAX: 905-629-7785

Cascade GmbH
D-41199 Monchengladbach
Klosterhofweg 52
Germany
Tel: 49-216-668230
FAX: 49-216-6682323

Cascade Finland
Albert Petreliuksenkatu 3
01370 Vantaa
Finland
Tel: 358-9-836-1925
FAX: 358-9-836-1935

Cascade N.V.
European Headquarters
P.O. Box 3009
1300 El Almere
Damsluisweg 56
1332 ED Almere
The Netherlands
Tel: 31-36-5492911
FAX: 31-36-5492964

Cascade N.V.
Benelux Sales and Service
P.O. Box 3009
1300 El Almere
Damsluisweg 56
1332 ED Almere
The Netherlands
Tel: 31-36-5492950
FAX: 31-36-5492974

Cascade (UK) Ltd.
15, Orgreave Crescent
Dore House Industrial Estate
Handsworth
Sheffield S13 9NQ
England
Tel: 742-697524
FAX: 742-695121

Cascade Scandinavia AB
Box 124
Hammarvägen 10
567 23 Vaggeryd
Sweden
Tel: 42-0-393-36950
FAX: 46-0-393-36959

Cascade Norway
Østerliveien 37A
1153 Oslo
Norway
Tel: 47-22-743160
FAX: 47-22-743157

Cascade France S.A.R.L.
1D Rue De Charaintru
BP 18, 91360 Epinay-Sur-Orge
Morangis Cedex, France
Tel: 33-1- 64547500
FAX: 33-1-64547501

Cascade Hispania S.A.
Carrer 5 Sector C
Zona Franca Duanera
Poligono de la Zon Franca
08040 Barcelona, Spain
Office No. 256
Tel: 93-264-07-30
FAX: 93-264-07-31

Cascade Japan Ltd.
5-5-41,
Torikai Kami
Settsu, Osaka
Japan, 566
Tel: 81-726-53-3490
FAX: 81-726-53-3497

Cascade Korea
108B, Namdong Ind Complex
658-3 Gojan-Dong
Namdong-Gu
Inchon, 405-310 Korea
Tel: 82-32-821-2051
FAX: 82-32-821-2055

Cascade Australia
1445 Ipswich Road
Rocklea, QLD 4106
Australia
Tel: 1-800227-223
FAX: (07) 3373-7333

Cascade New Zealand
15 Ra Ora Drive
East Tamaki, Auckland
New Zealand
Tel: 9-273-9136
FAX: 9-273-9137

Cascade (Africa) Pty. Ltd.
P.O. Box 625, Isando 1600
60A Steel Road
Sparton, Kempton Park
South Africa
Tel: 27-11-975-9240
FAX: 27-11-394-1147

Cascade-Xiamen
No. 668 Yangguang Rd.
Xinyang Industrial Zone
Haicang, Xiamen City
Fujian Province
P.R. China 361026
Tel: 86-592-651-2500
FAX: 86-592-651-2571

Cascade (Singapore)
Trading Co.
Four Seasons Park
Autumn Block - Apt. 1802
12 Cuscaden Walk
Singapore
Tel: 65-834-1935
FAX: 65-834-1936

cascade™

© Cascade Corporation 2003

1-2003